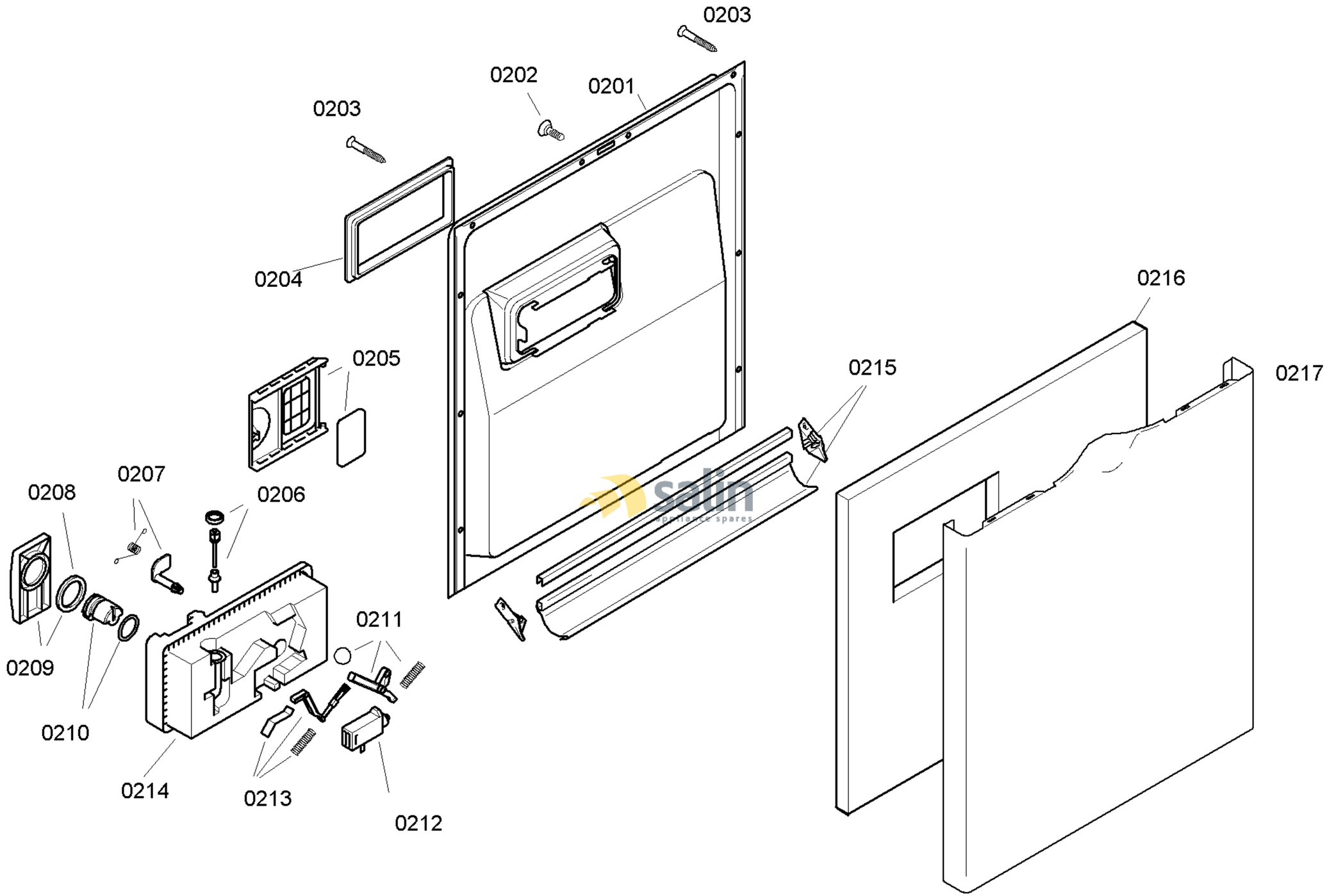

58300000130782 aet 000 b 2/6

FAMILY : SGS45M28EU
MODEL NO: SGS45M28EU/90
Check Position No/Part No or Replacement No

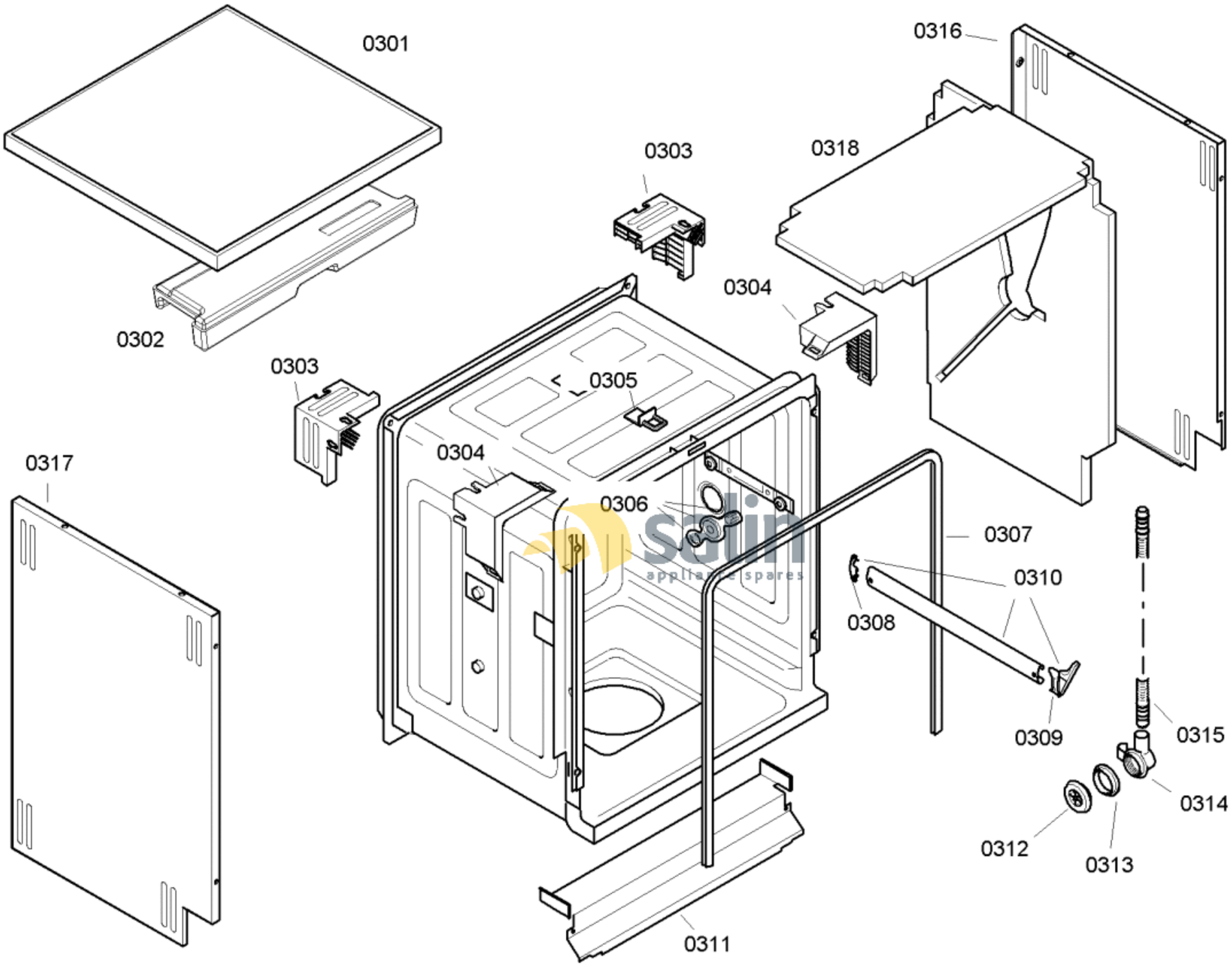

58300000130782 aet 000 b 3/6

FAMILY : SGS45M28EU

MODEL NO: SGS45M28EU/90

Check Position No/Part No or Replacement No

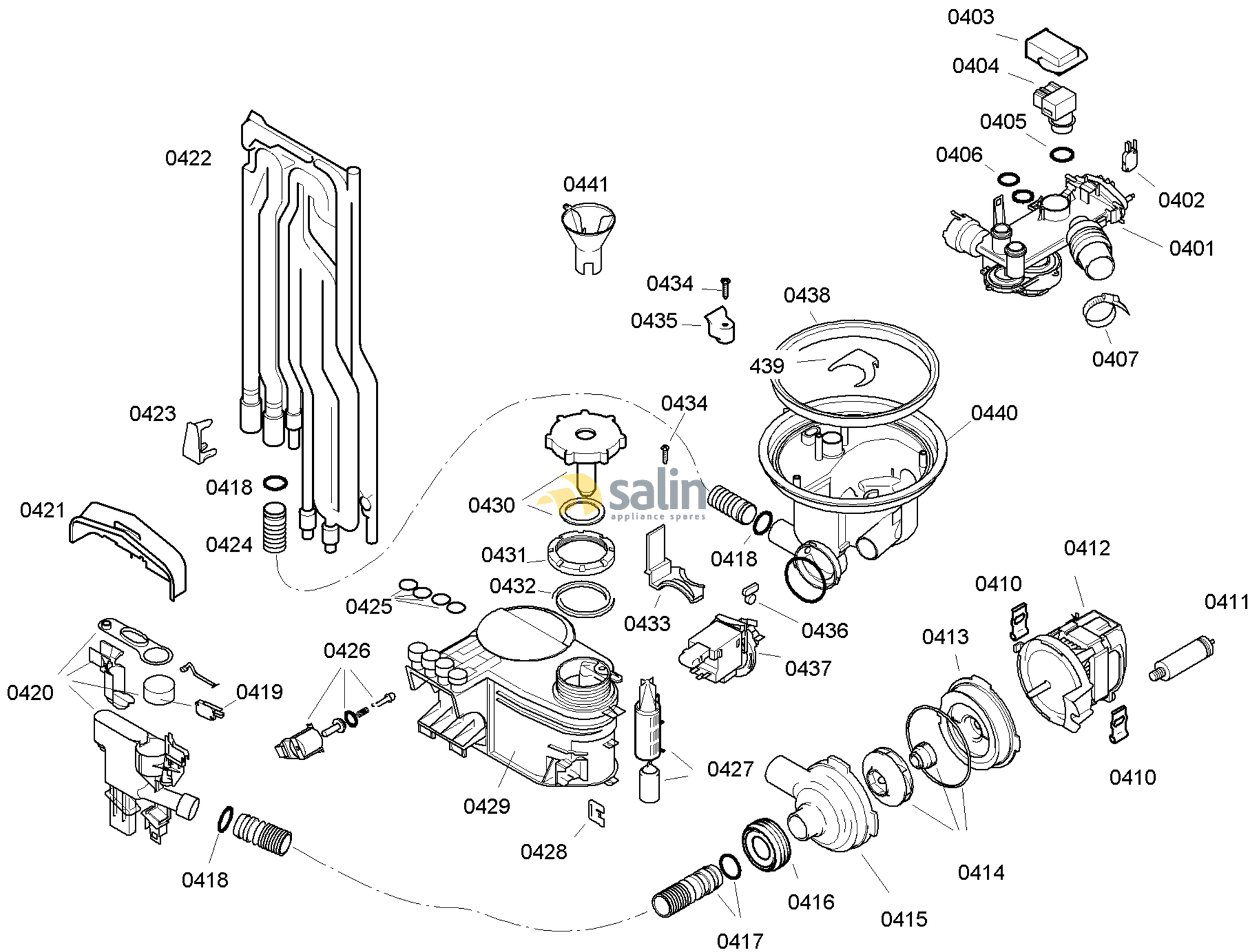

58300000130782 aet 000 b 4/6

FAMILY : SGS45M28EU
MODEL NO: SGS45M28EU/90
Check Position No/Part No or Replacement No

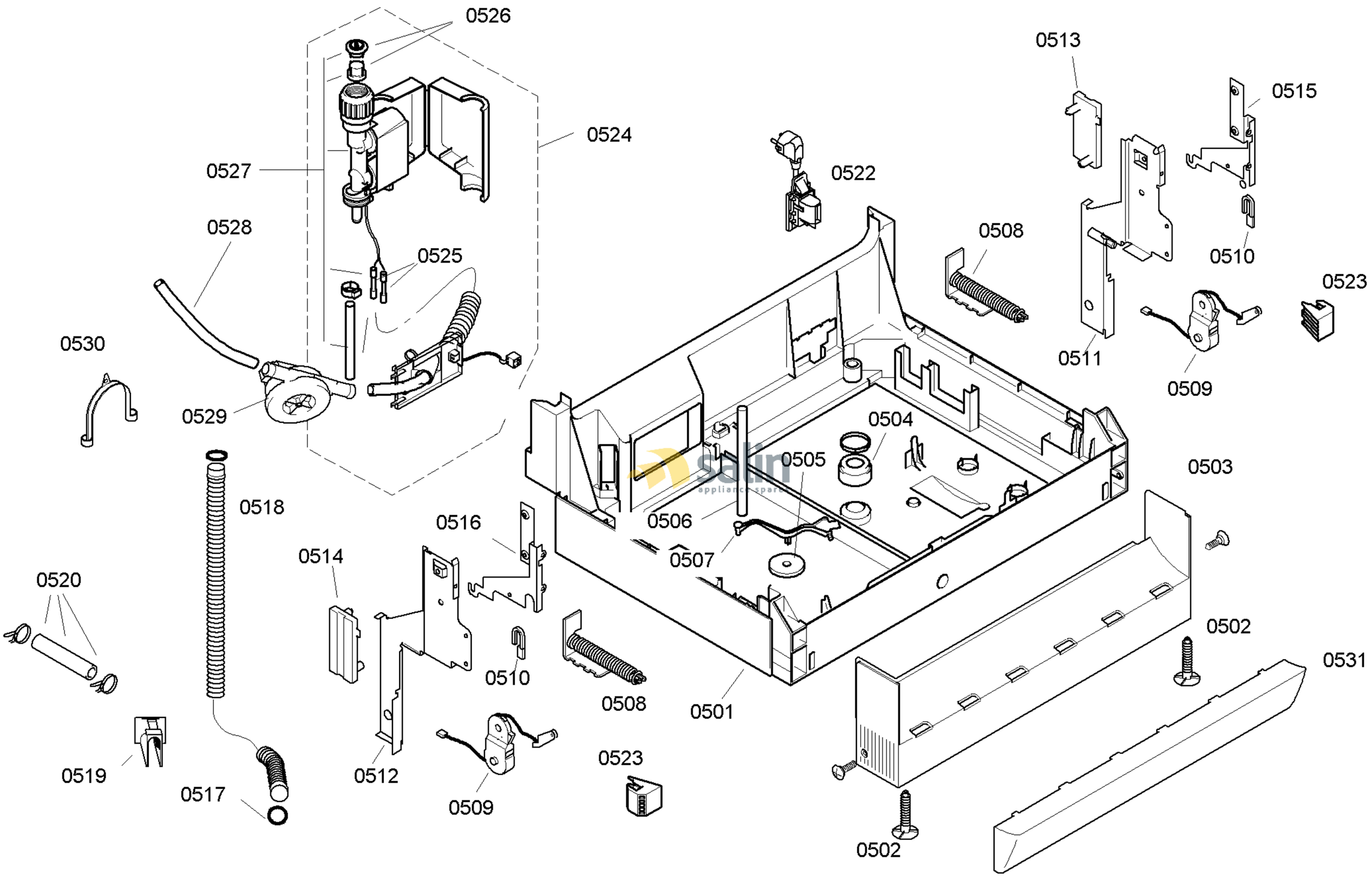

58300000130782 aet 000 b 5/6

FAMILY : SGS45M28EU
MODEL NO: SGS45M28EU/90
Check Position No/Part No or Replacement No

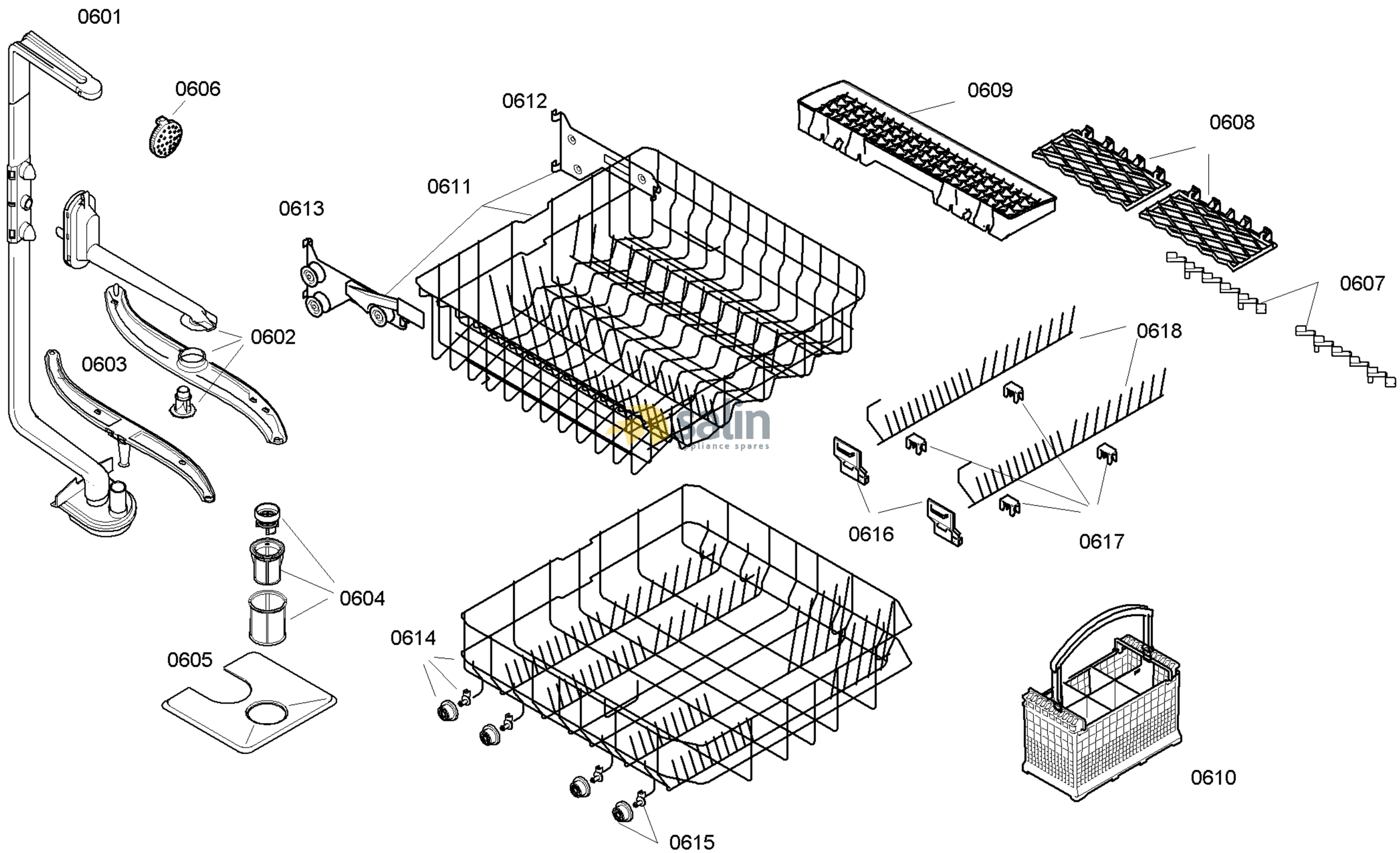

58300000130782 aet 000 b 6/6

FAMILY : SGS45M28EU
MODEL NO: SGS45M28EU/90
Check Position No/Part No or Replacement No