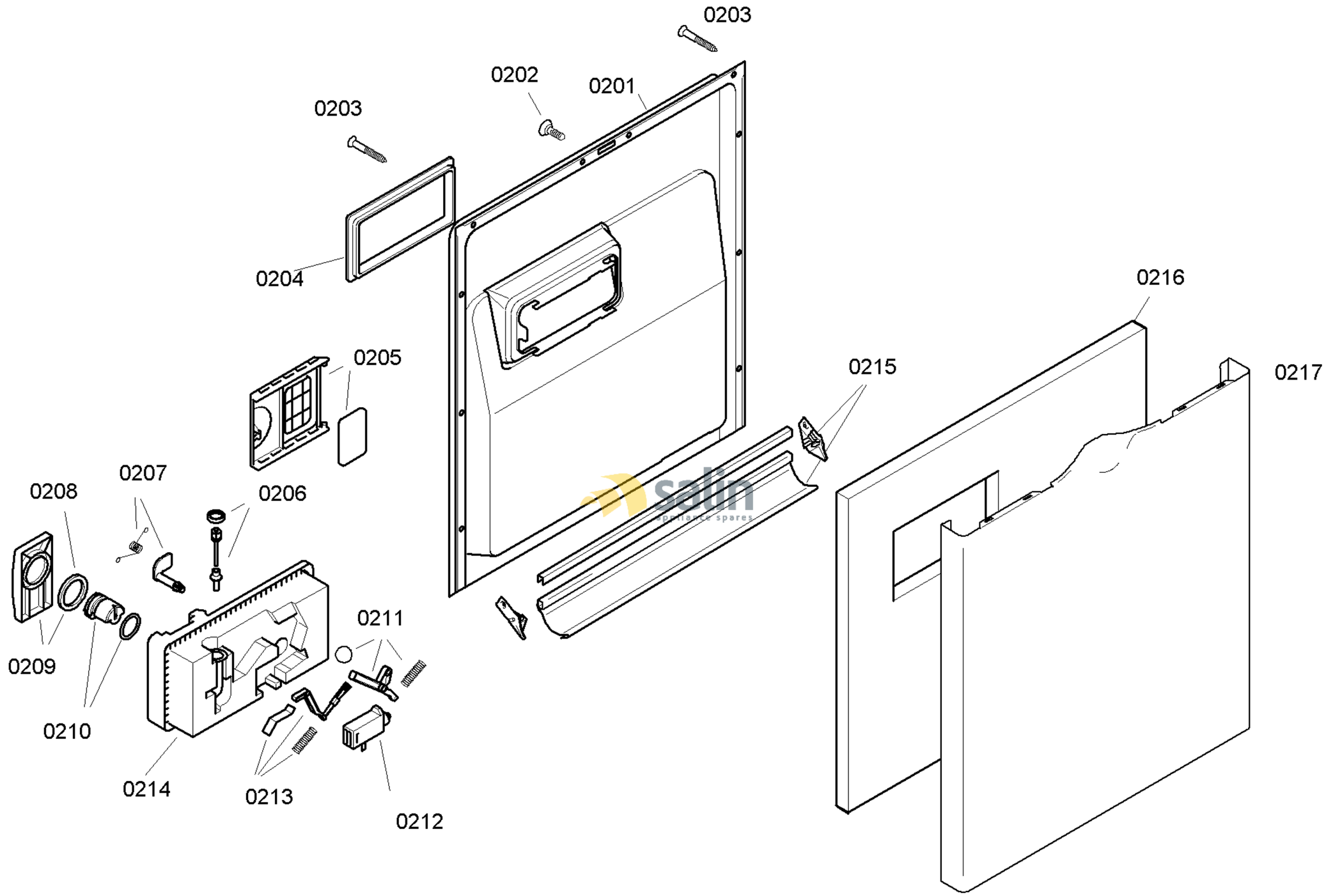

58300000130483 aet 000 a 2/6

FAMILY : SGS57T02EU
MODEL NO: SGS57T02EU/18
Check Position No/Part No or Replacement No

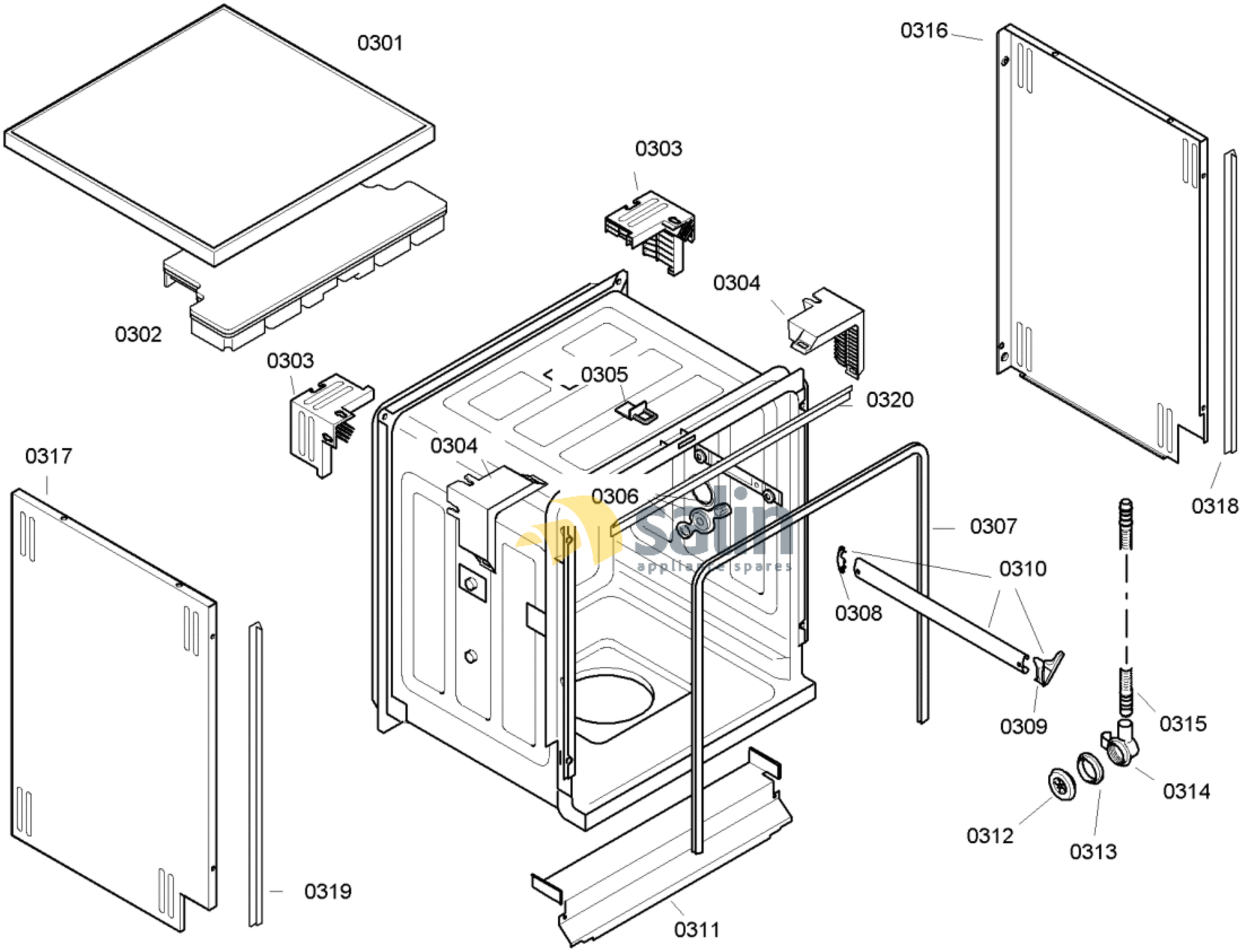

58300000130483 aet 000 a 3/6

FAMILY : SGS57T02EU

MODEL NO: SGS57T02EU/18

Check Position No/Part No or Replacement No

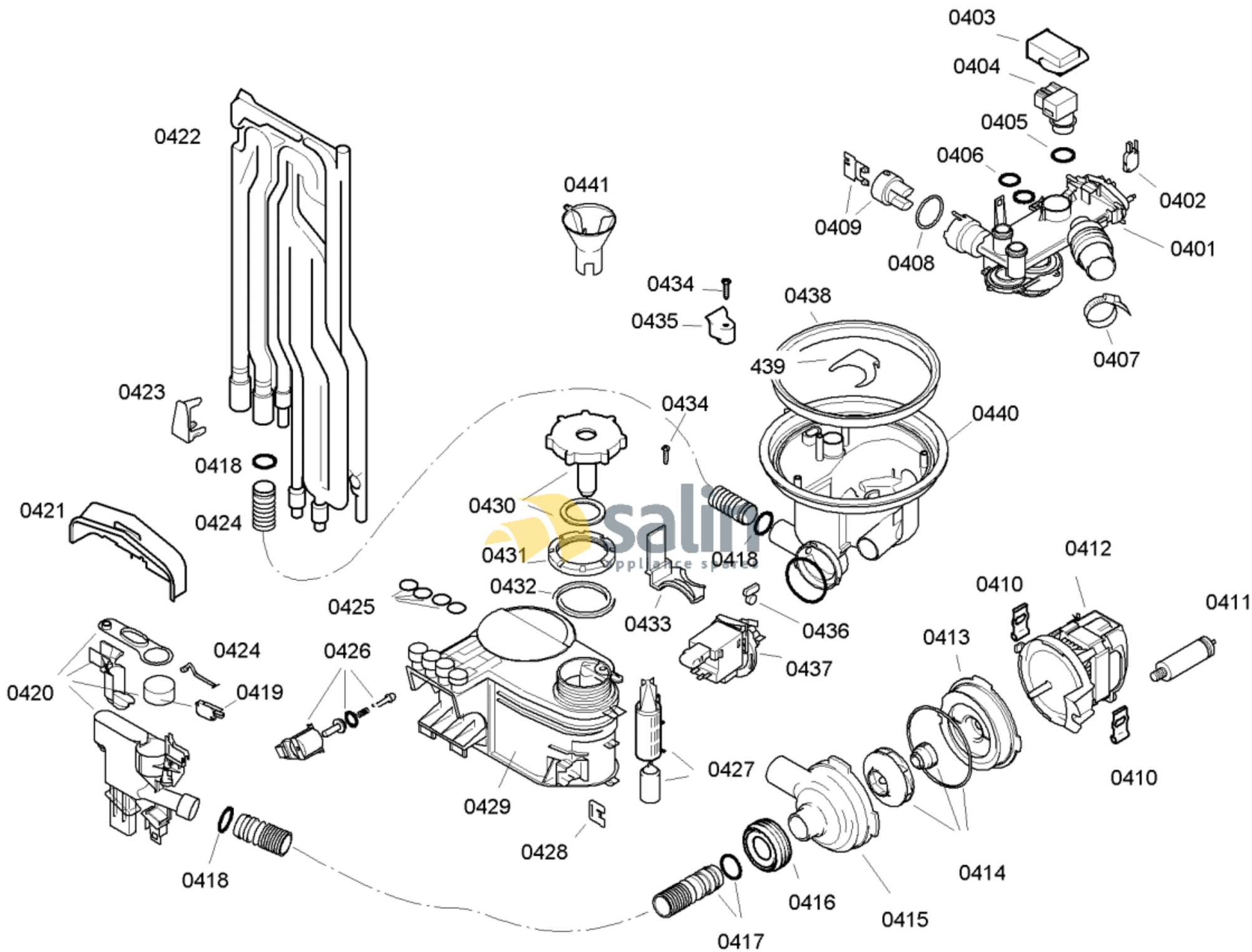

58300000130483 aet 000 a 4/6

FAMILY : SGS57T02EU

MODEL NO: SGS57T02EU/18

Check Position No/Part No or Replacement No

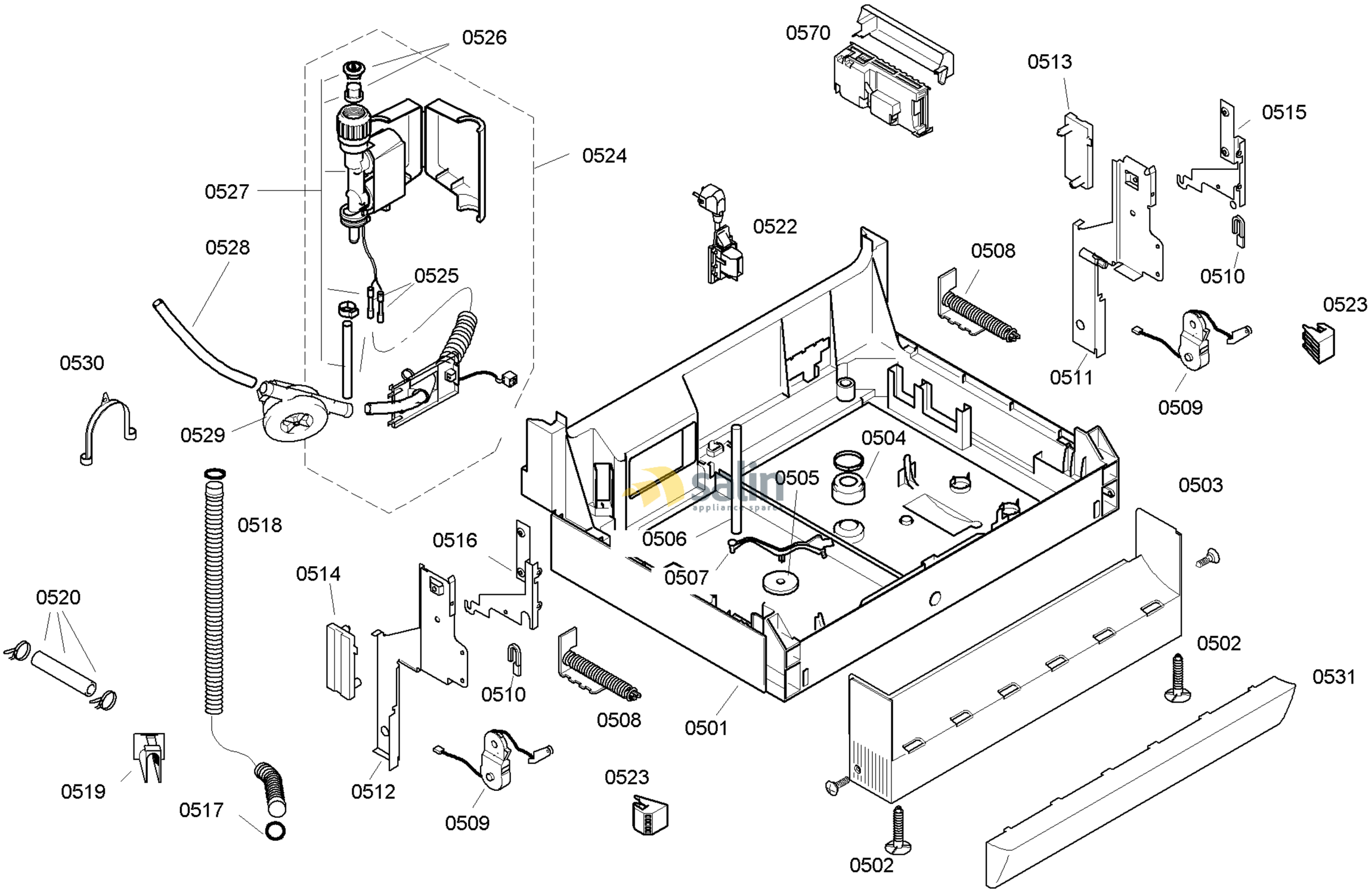

58300000130483 aet 000 a 5/6

FAMILY : SGS57T02EU
MODEL NO: SGS57T02EU/18
Check Position No/Part No or Replacement No

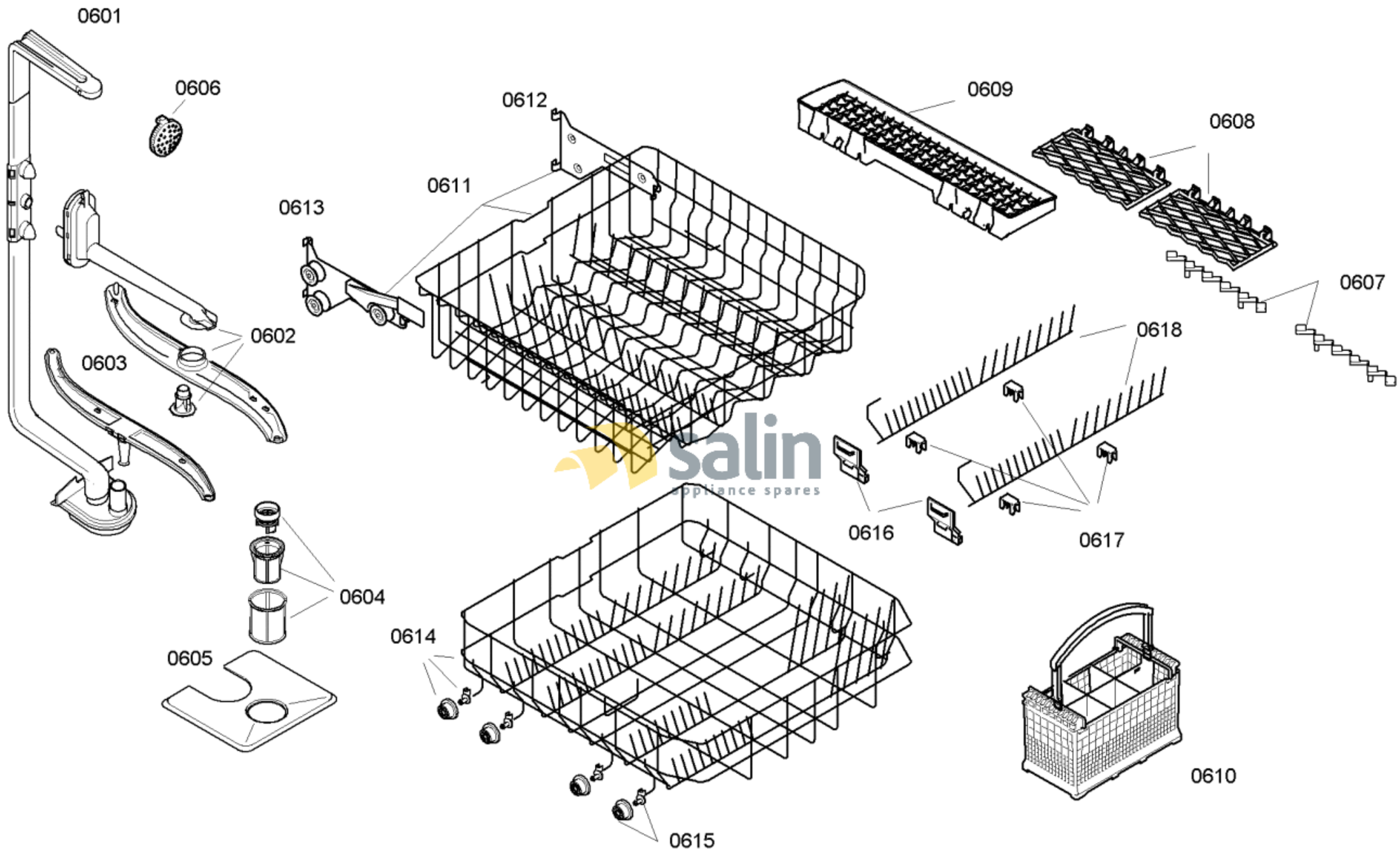

58300000130483 aet 000 a 6/6

FAMILY : SGS57T02EU

MODEL NO: SGS57T02EU/18

Check Position No/Part No or Replacement No