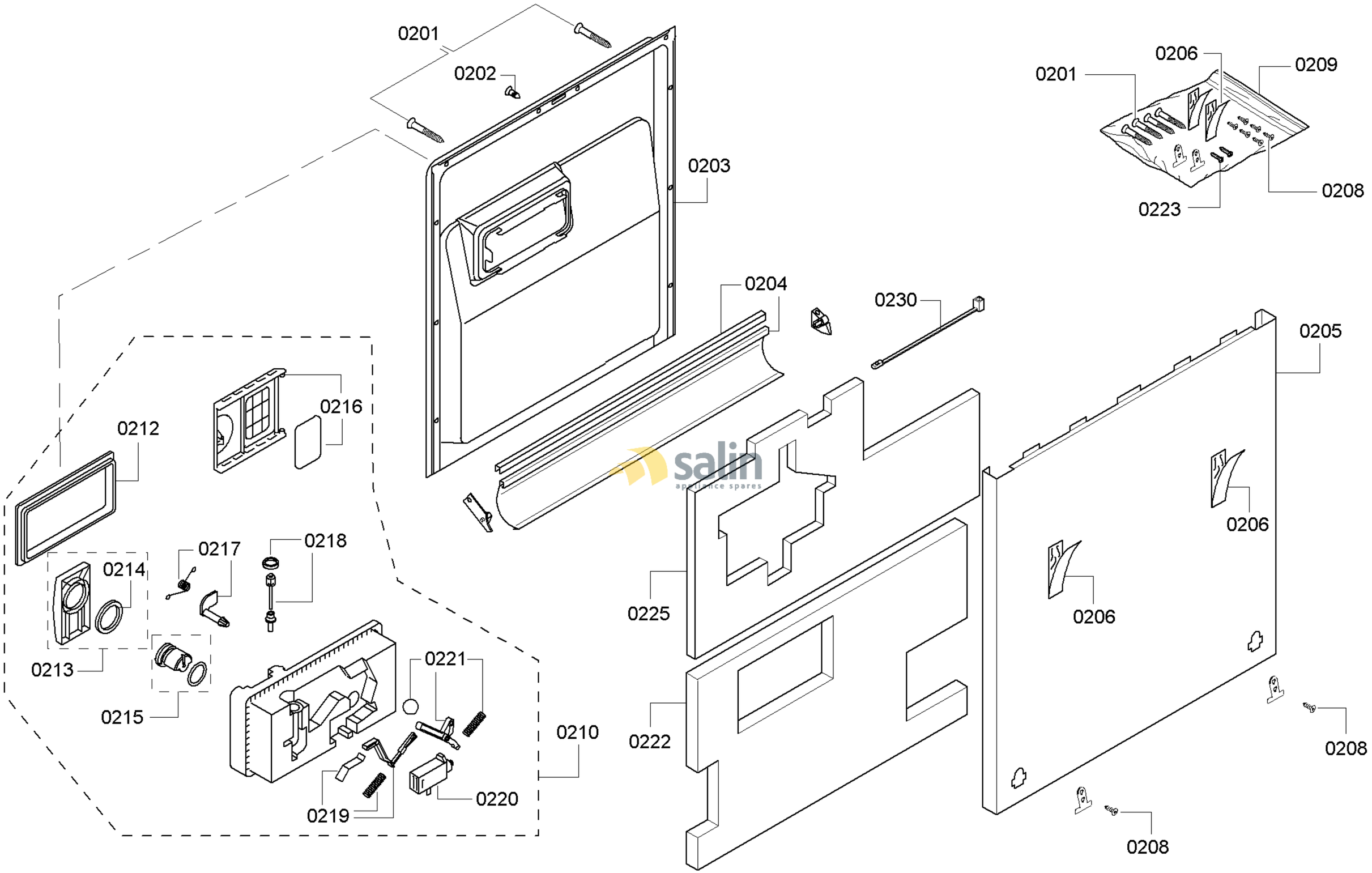

58300000152678 aet 000 a 2/6

FAMILY : SHV65P03UC
MODEL NO: SHV65P03UC/63
Check Position No/Part No or Replacement No

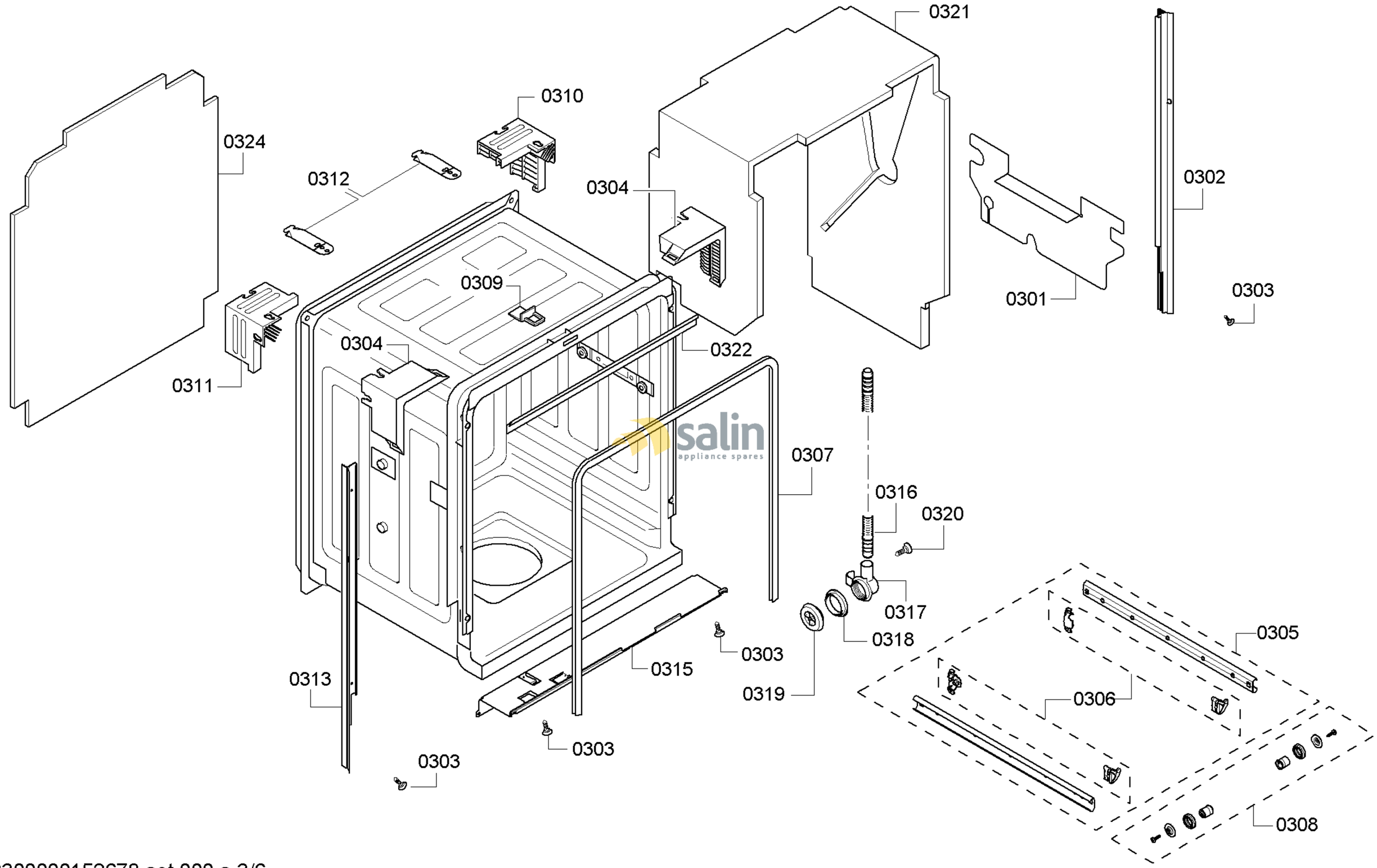

58300000152678 aet 000 a 3/6

FAMILY : SHV65P03UC
MODEL NO: SHV65P03UC/63
Check Position No/Part No or Replacement No

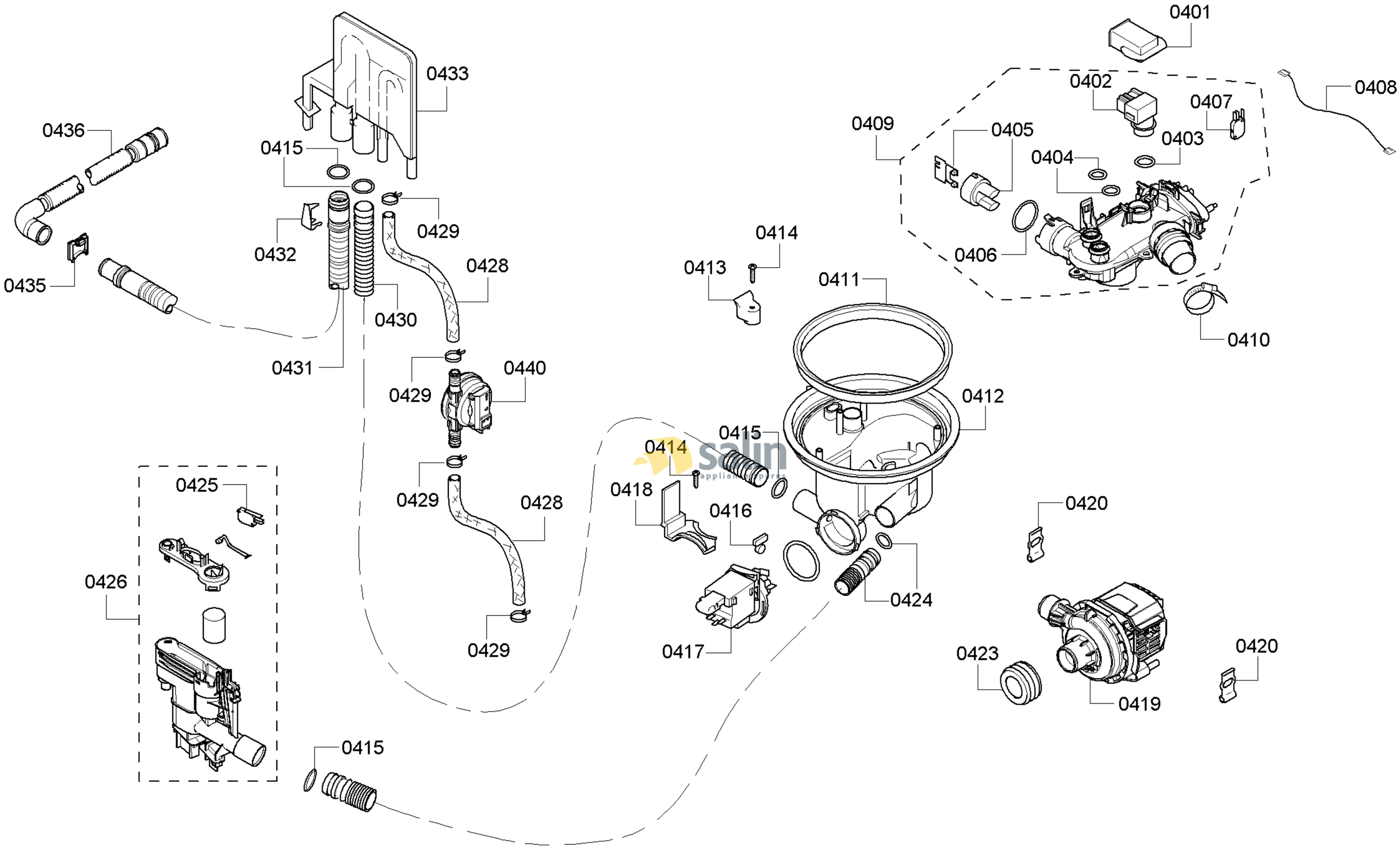

58300000152678 aet 000 a 4/6

FAMILY : SHV65P03UC
MODEL NO: SHV65P03UC/63
Check Position No/Part No or Replacement No

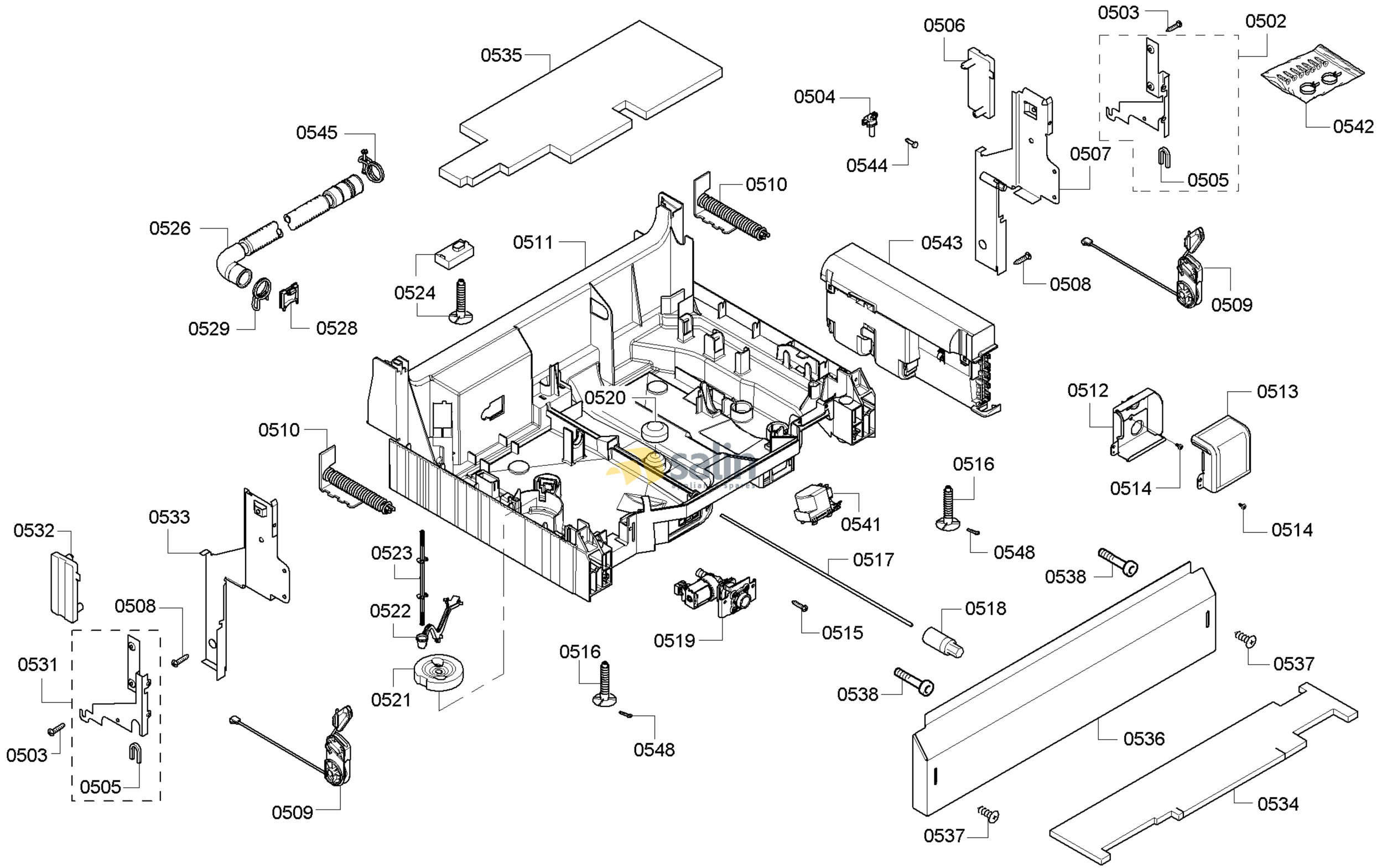

58300000152678 aet 000 a 5/6

FAMILY : SHV65P03UC
MODEL NO: SHV65P03UC/63
Check Position No/Part No or Replacement No

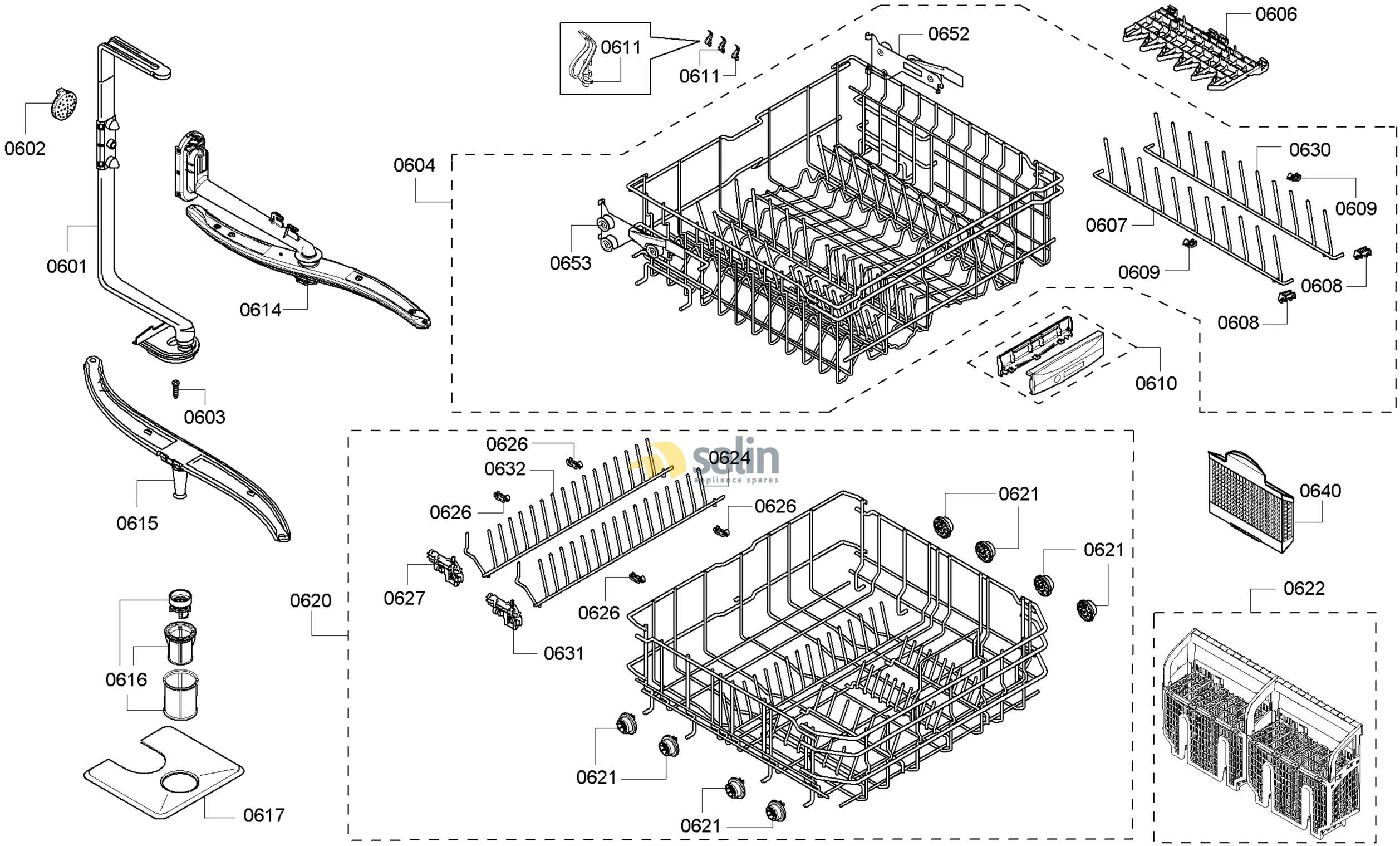

58300000152678 aet 000 a 6/6

FAMILY : SHV65P03UC
MODEL NO: SHV65P03UC/63
Check Position No/Part No or Replacement No