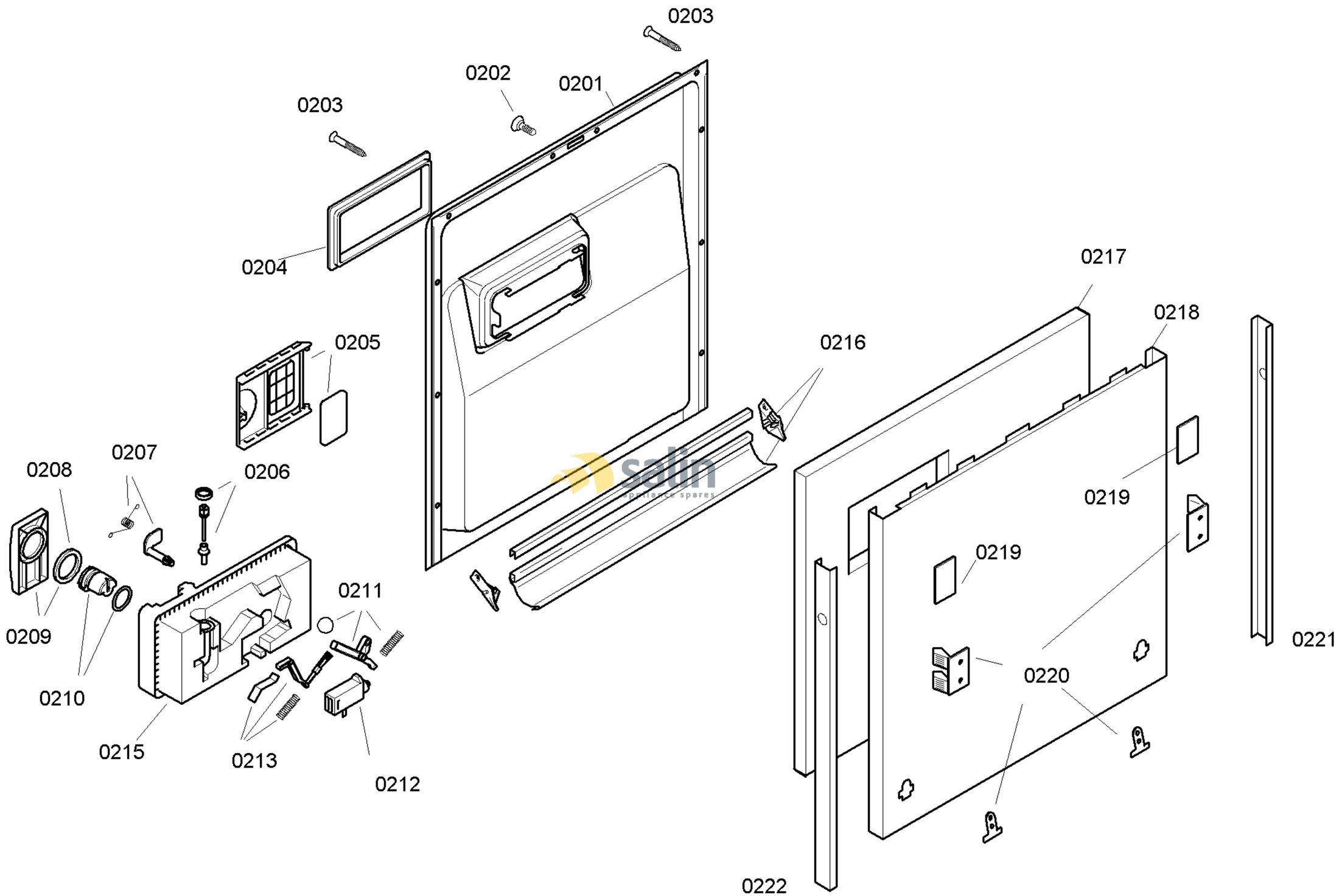

58300000119702 aet 000 b 2/6

FAMILY : SGV45M23EP
MODEL NO: SGV45M23EP/75
Check Position No/Part No or Replacement No

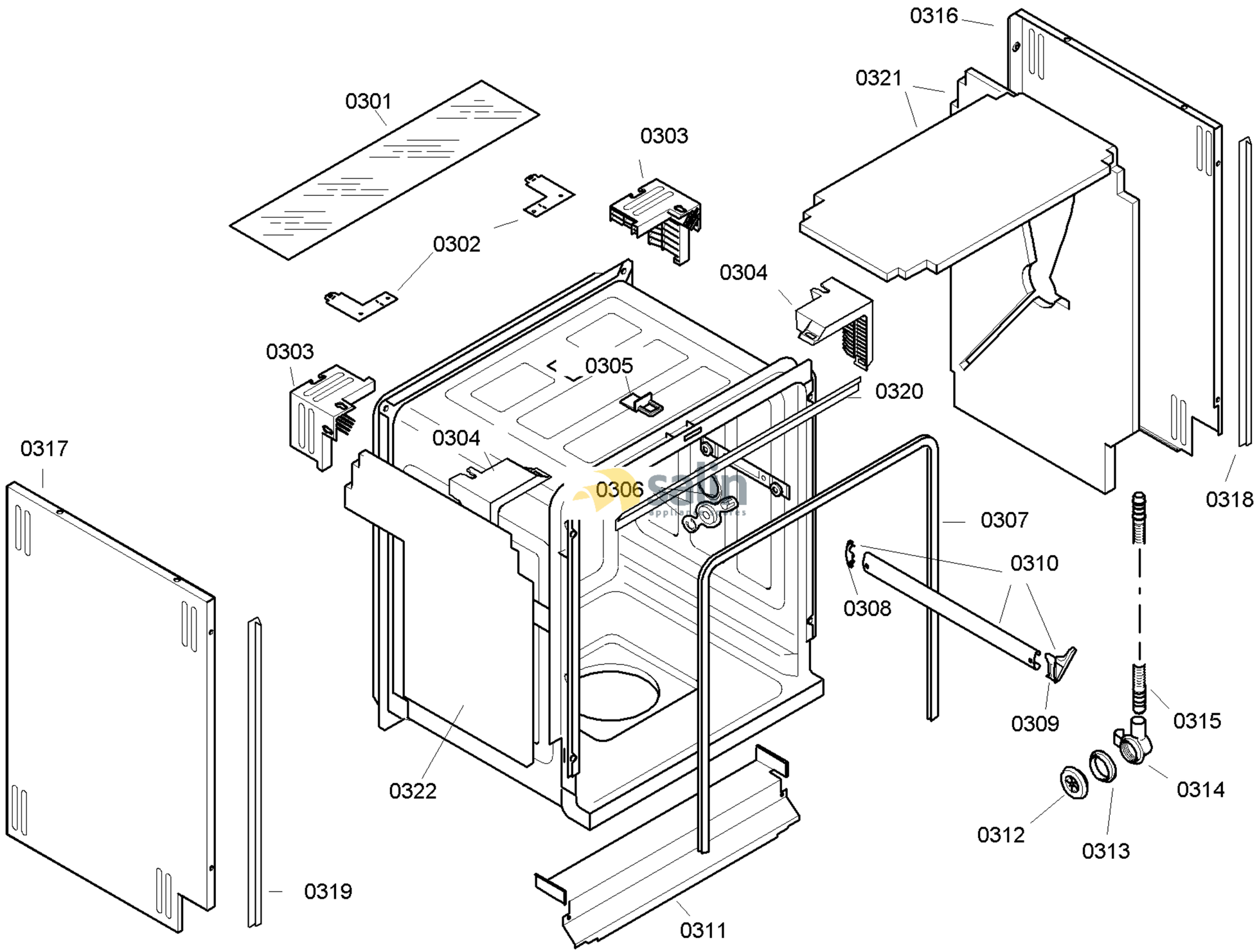

58300000119702 aet 000 b 3/6

FAMILY : SGV45M23EP
MODEL NO: SGV45M23EP/75
Check Position No/Part No or Replacement No

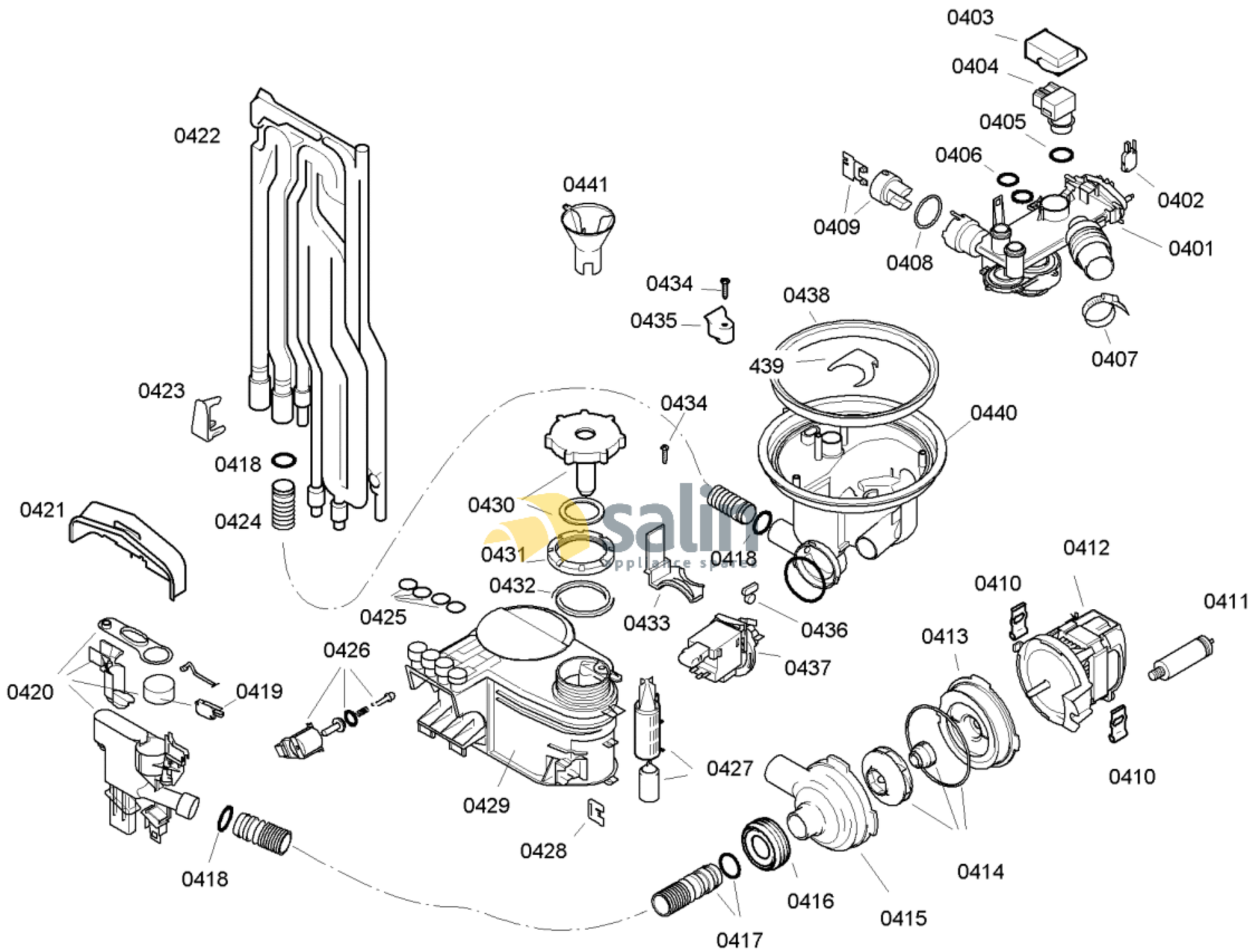

58300000119702 aet 000 b 4/6

FAMILY : SGV45M23EP

MODEL NO: SGV45M23EP/75

Check Position No/Part No or Replacement No

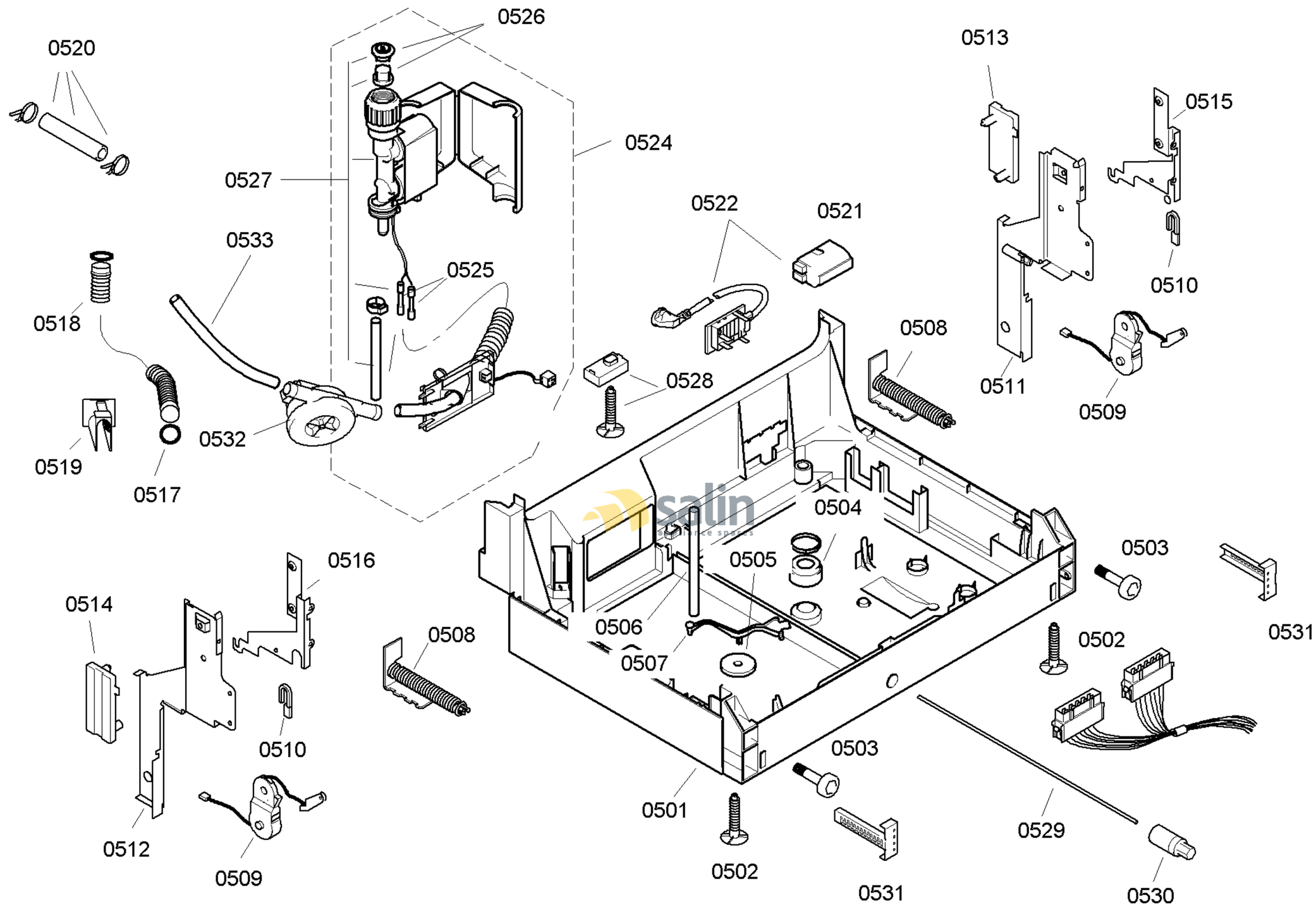

58300000119702 aet 000 b 5/6

FAMILY : SGV45M23EP
MODEL NO: SGV45M23EP/75
Check Position No/Part No or Replacement No

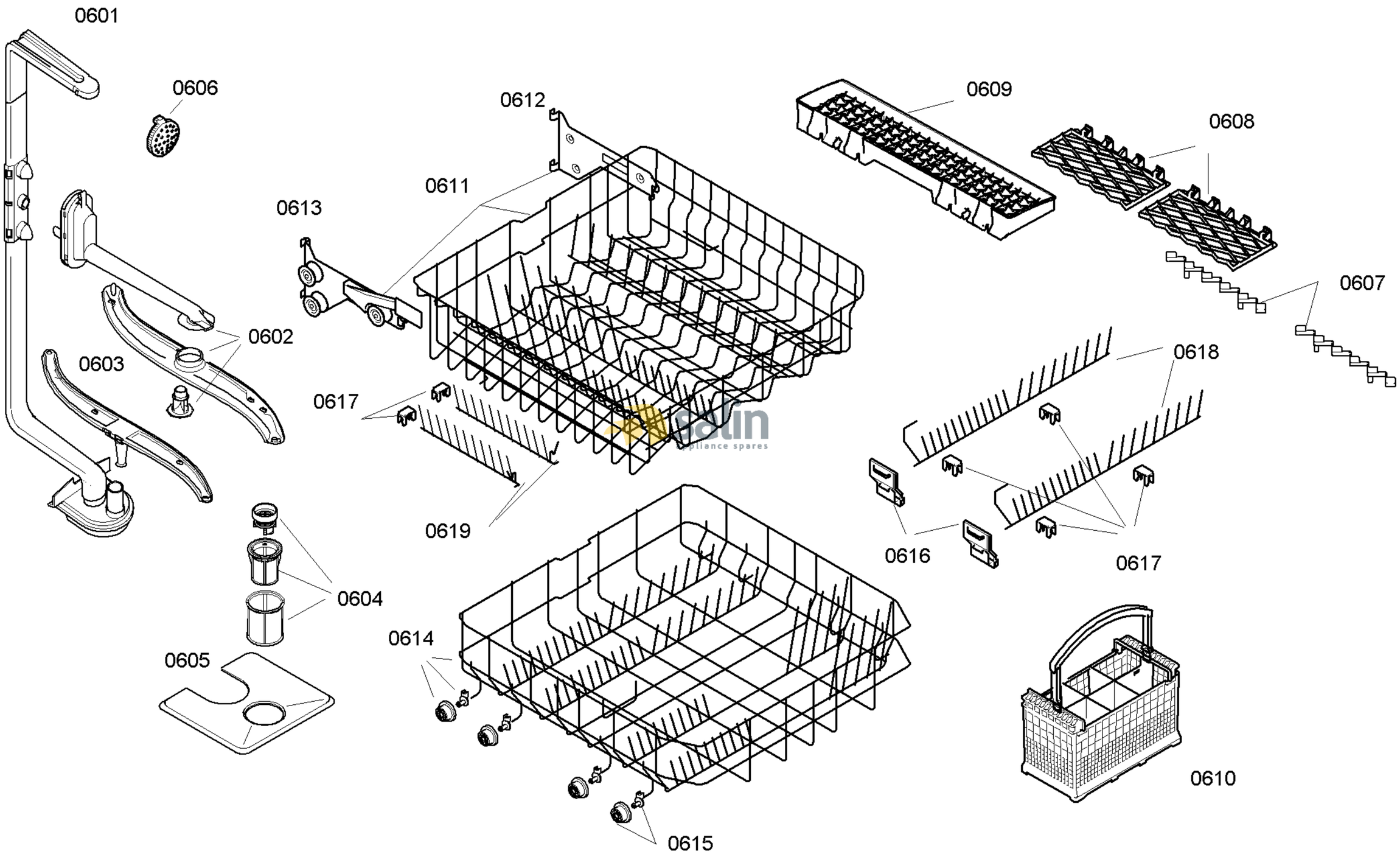

58300000119702 aet 000 b 6/6

FAMILY : SGV45M23EP
MODEL NO: SGV45M23EP/75
Check Position No/Part No or Replacement No