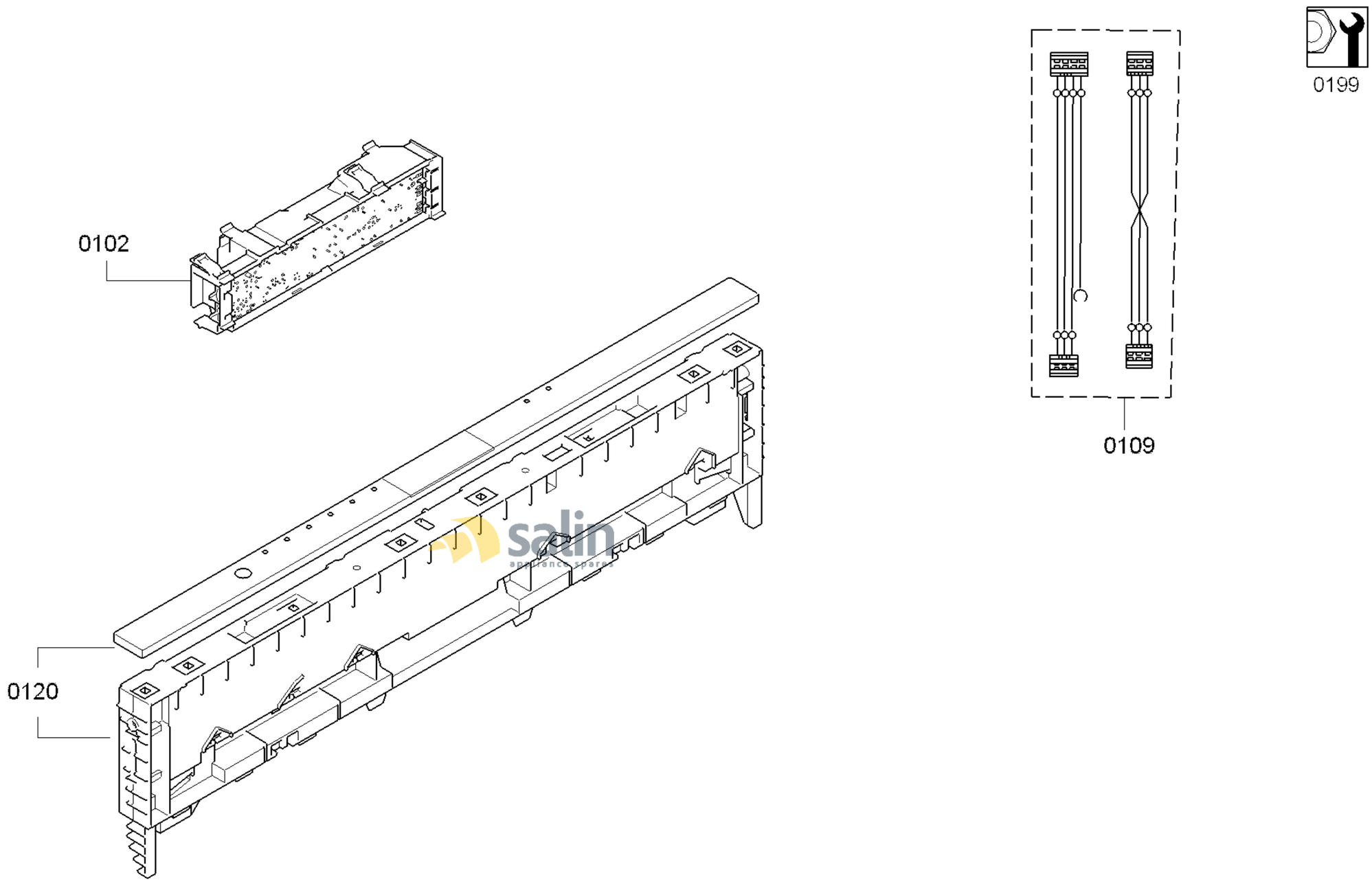

58300000168063 aet 000 a 1/6

FAMILY : SHV9ER53UC
MODEL NO: SHV9ER53UC/70
Check Position No/Part No or Replacement No

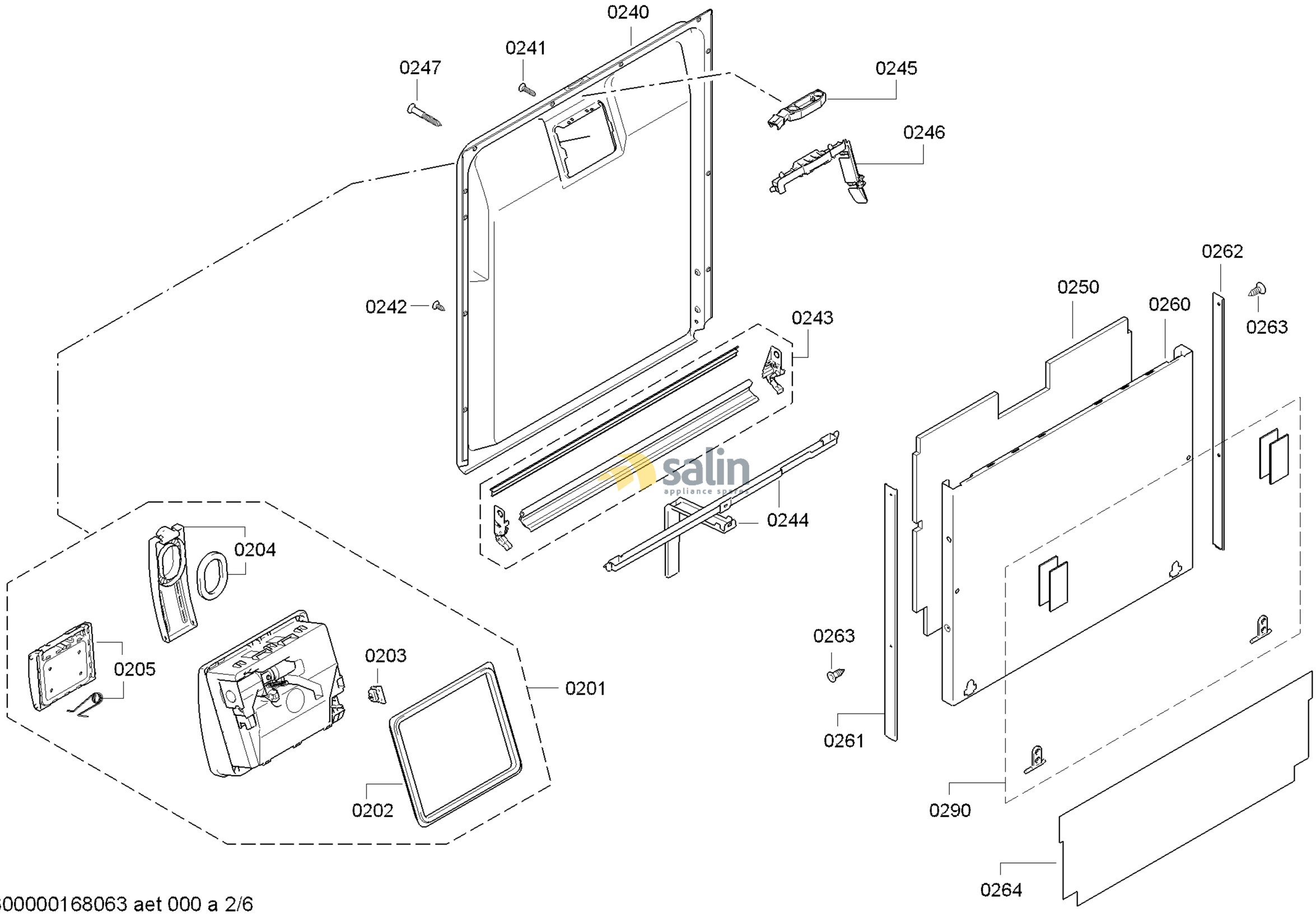

58300000168063 aet 000 a 2/6

FAMILY : SHV9ER53UC
MODEL NO: SHV9ER53UC/70
Check Position No/Part No or Replacement No

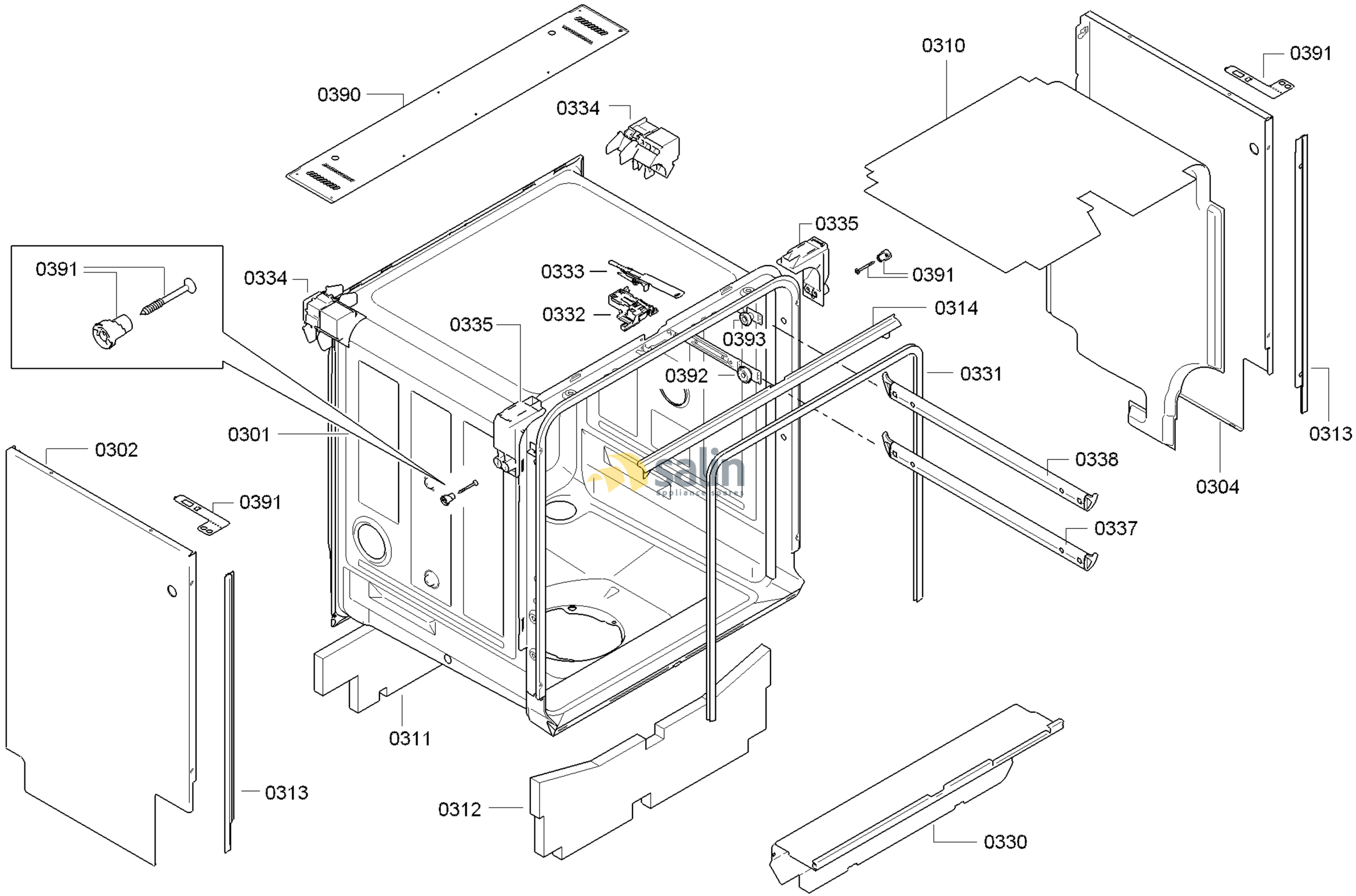

58300000168063 aet 000 a 3/6

FAMILY : SHV9ER53UC
MODEL NO: SHV9ER53UC/70
Check Position No/Part No or Replacement No

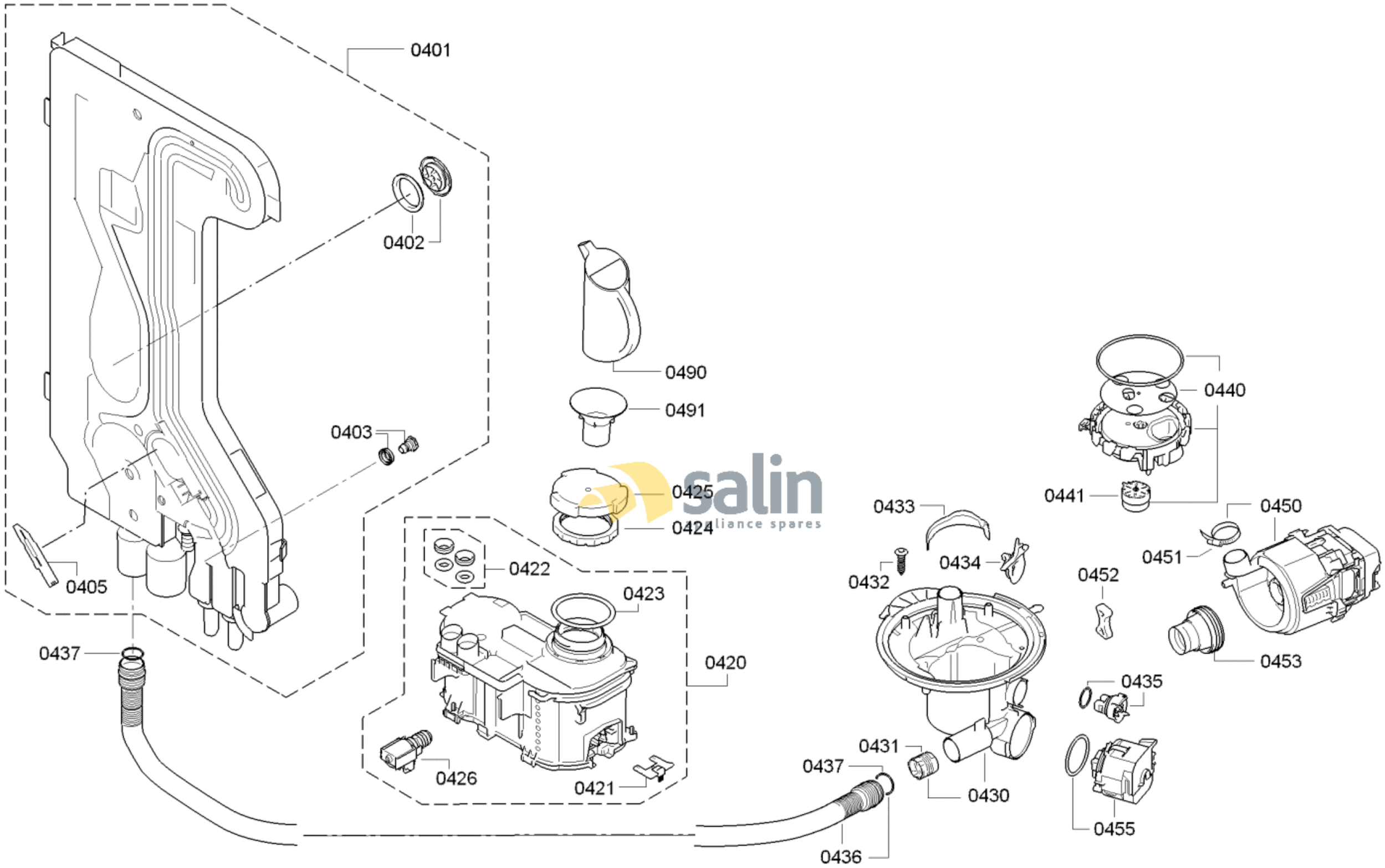

58300000168063 aet 000 a 4/6

FAMILY : SHV9ER53UC

MODEL NO: SHV9ER53UC/70

Check Position No/Part No or Replacement No

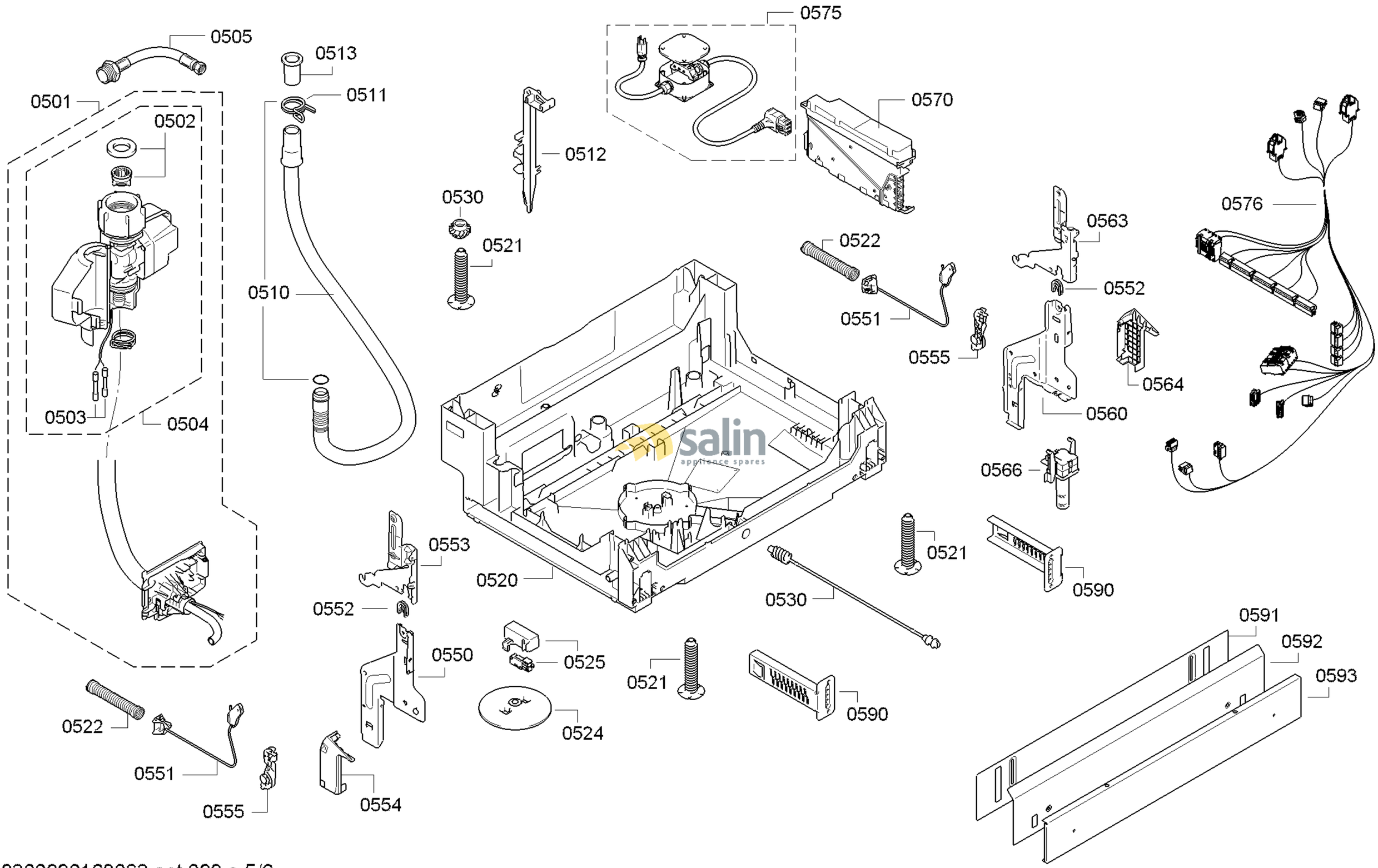

58300000168063 aet 000 a 5/6

FAMILY : SHV9ER53UC
MODEL NO: SHV9ER53UC/70
Check Position No/Part No or Replacement No

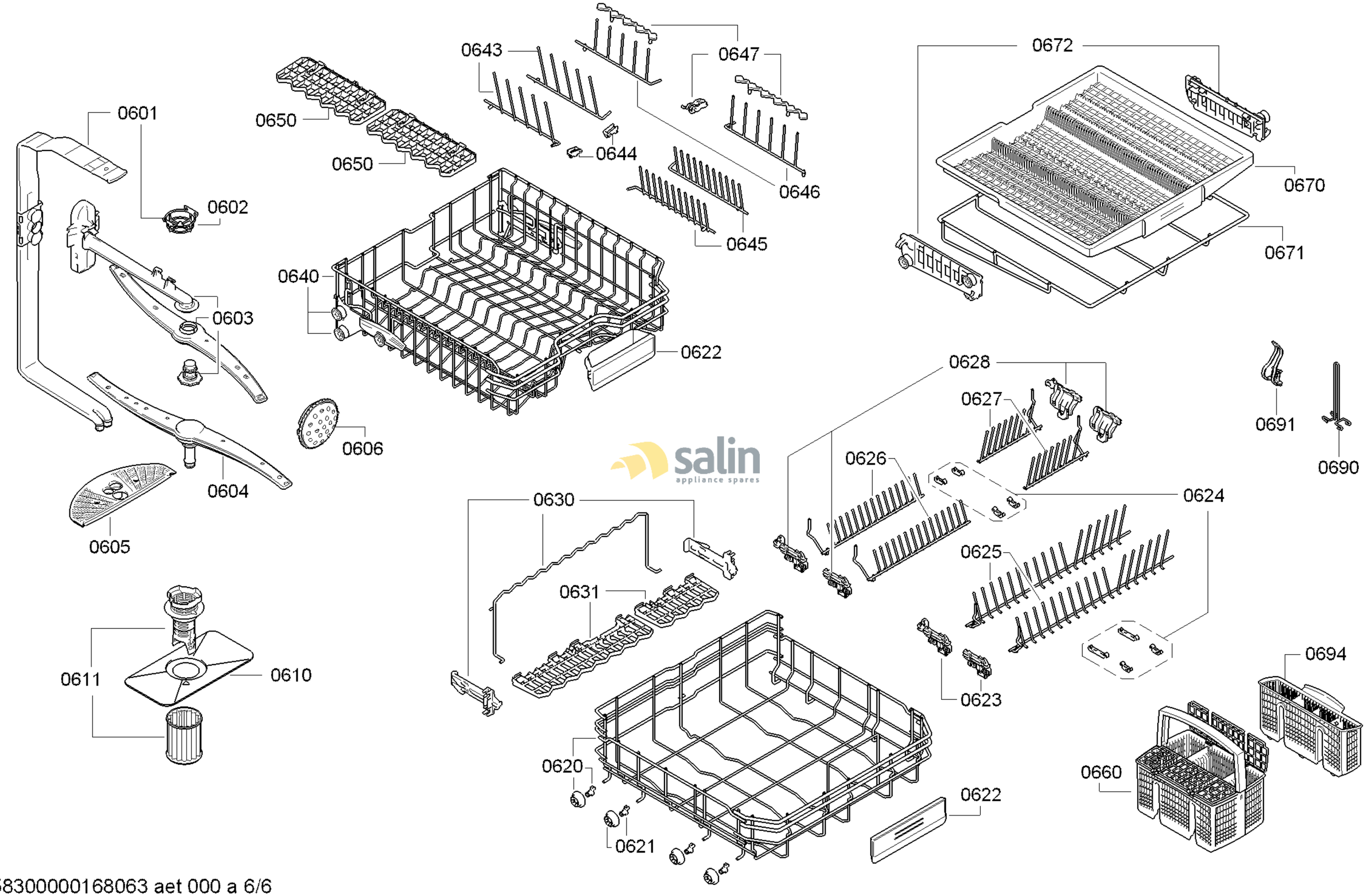

salin
appliance spares

58300000168063 aet 000 a 6/6

FAMILY : SHV9ER53UC
MODEL NO: SHV9ER53UC/70
Check Position No/Part No or Replacement No