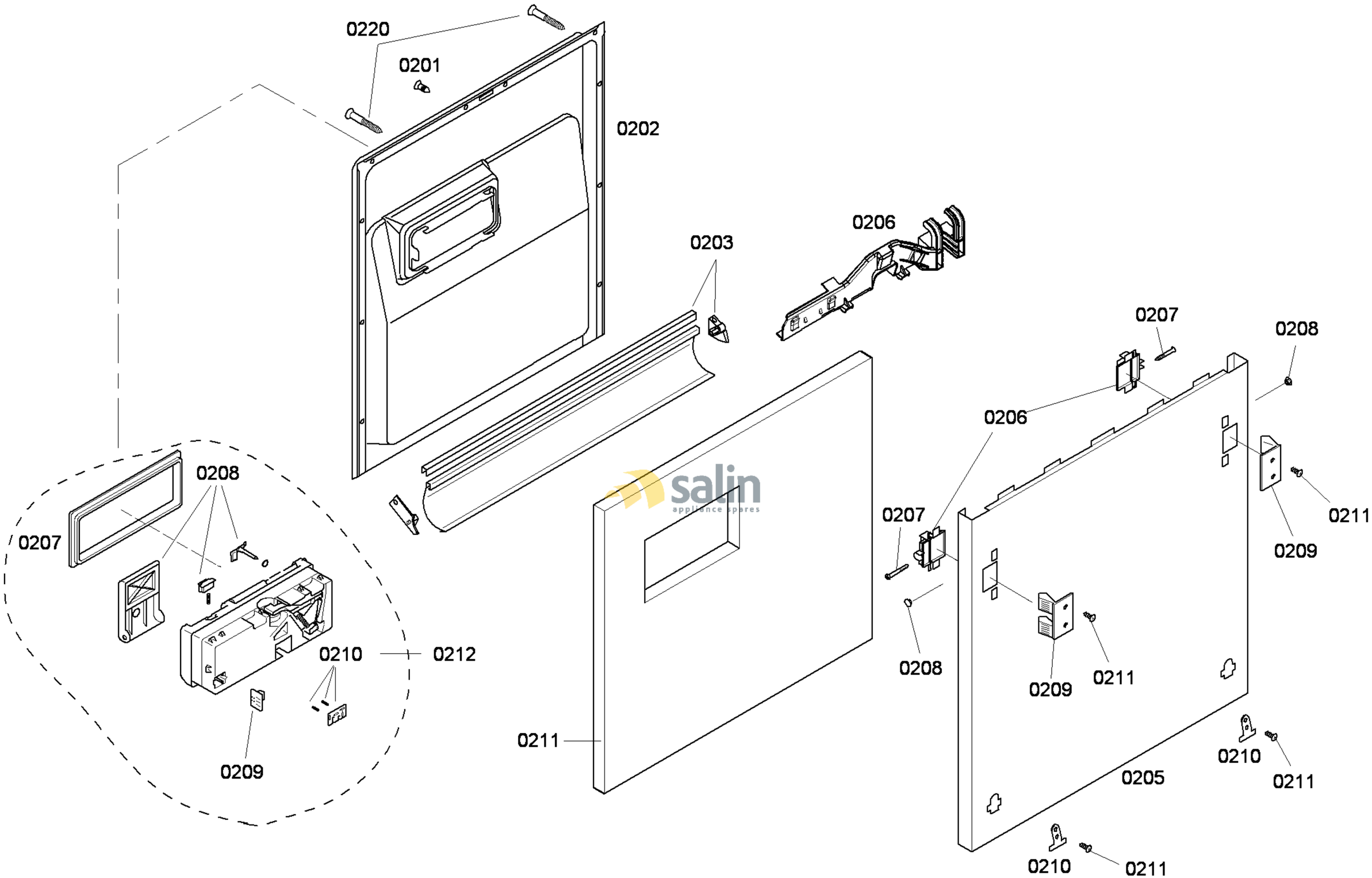

58300000128171 aet 000 c 2/6

FAMILY : SHI66A05UC
MODEL NO: SHI66A05UC/23
Check Position No/Part No or Replacement No

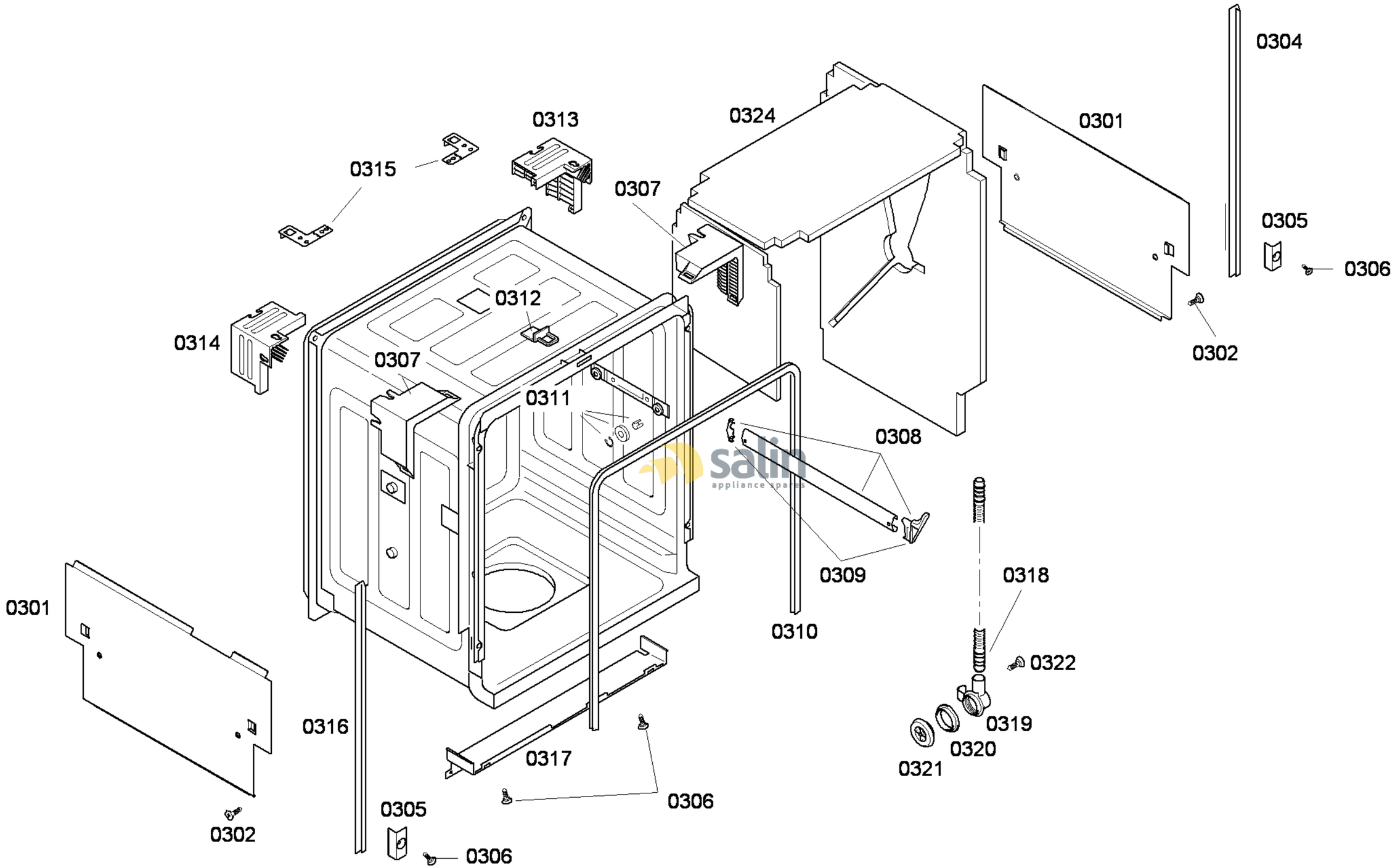

58300000128171 aet 000 c 3/6

FAMILY : SHI66A05UC
MODEL NO: SHI66A05UC/23
Check Position No/Part No or Replacement No

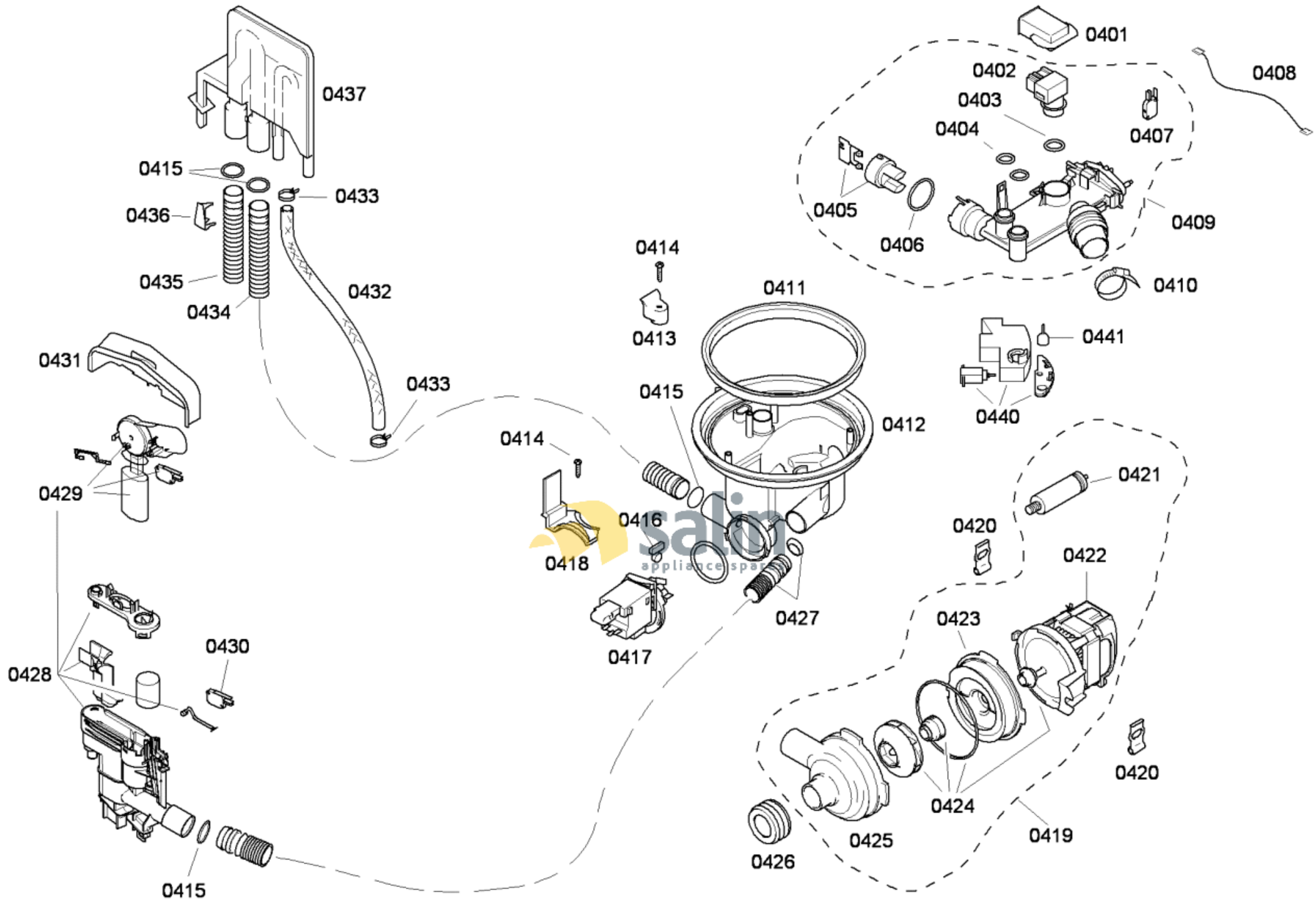

58300000128171 aet 000 c 4/6

FAMILY : SHI66A05UC

MODEL NO: SHI66A05UC/23

Check Position No/Part No or Replacement No

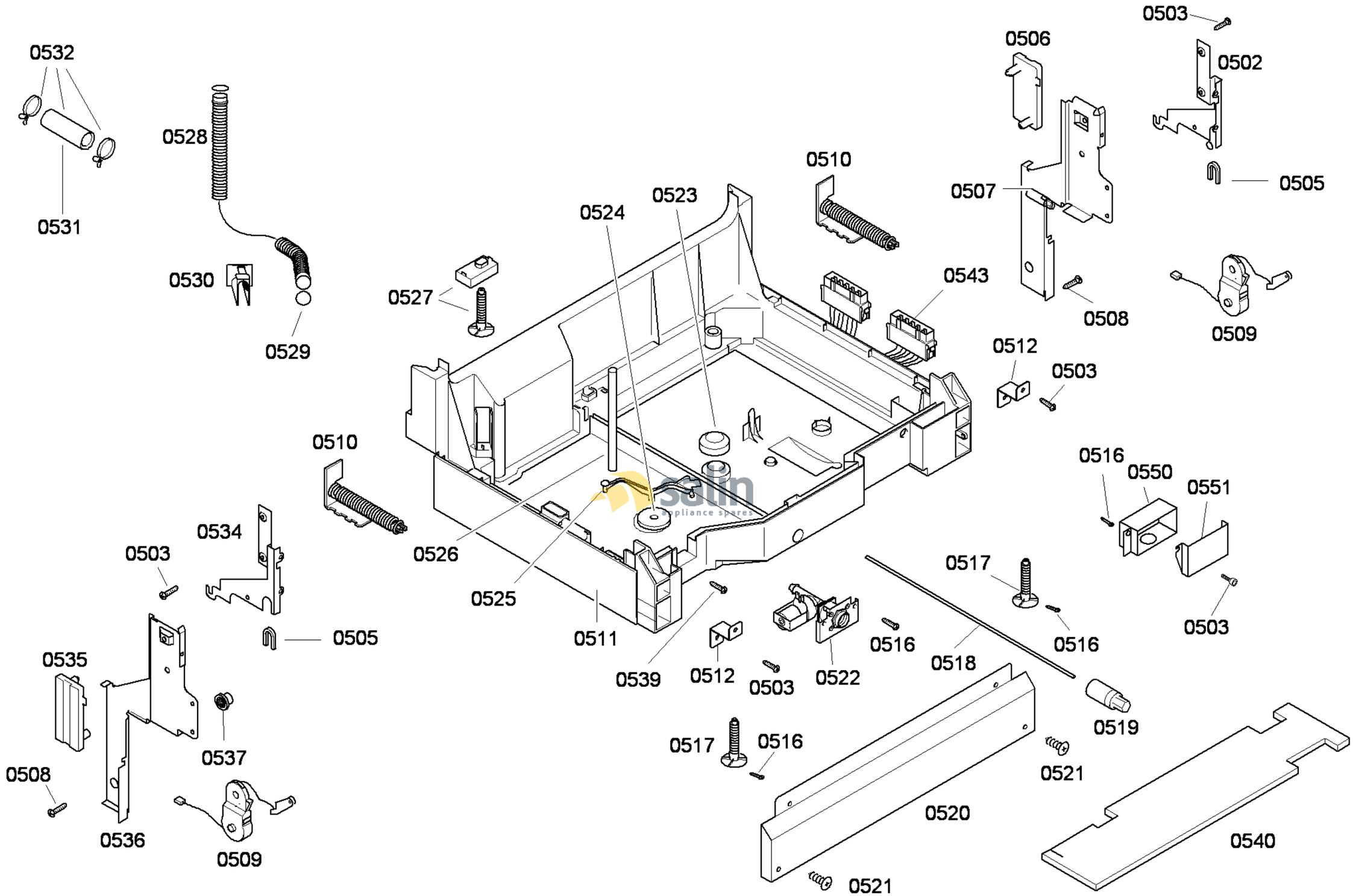

58300000128171 aet 000 c 5/6

FAMILY : SHI66A05UC
MODEL NO: SHI66A05UC/23
Check Position No/Part No or Replacement No

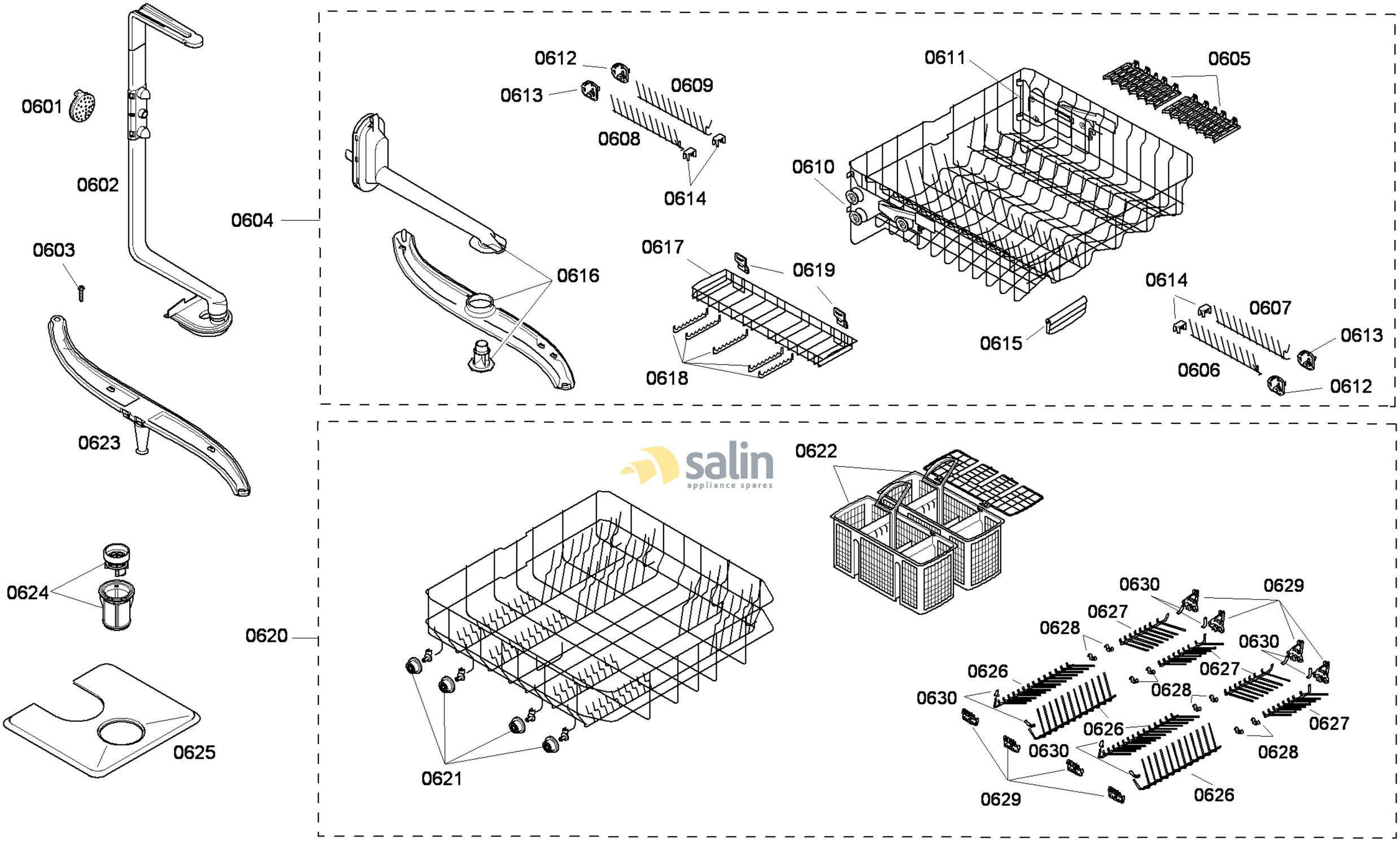

58300000128171 aet 000 c 6/6

FAMILY : SHI66A05UC
MODEL NO: SHI66A05UC/23
Check Position No/Part No or Replacement No