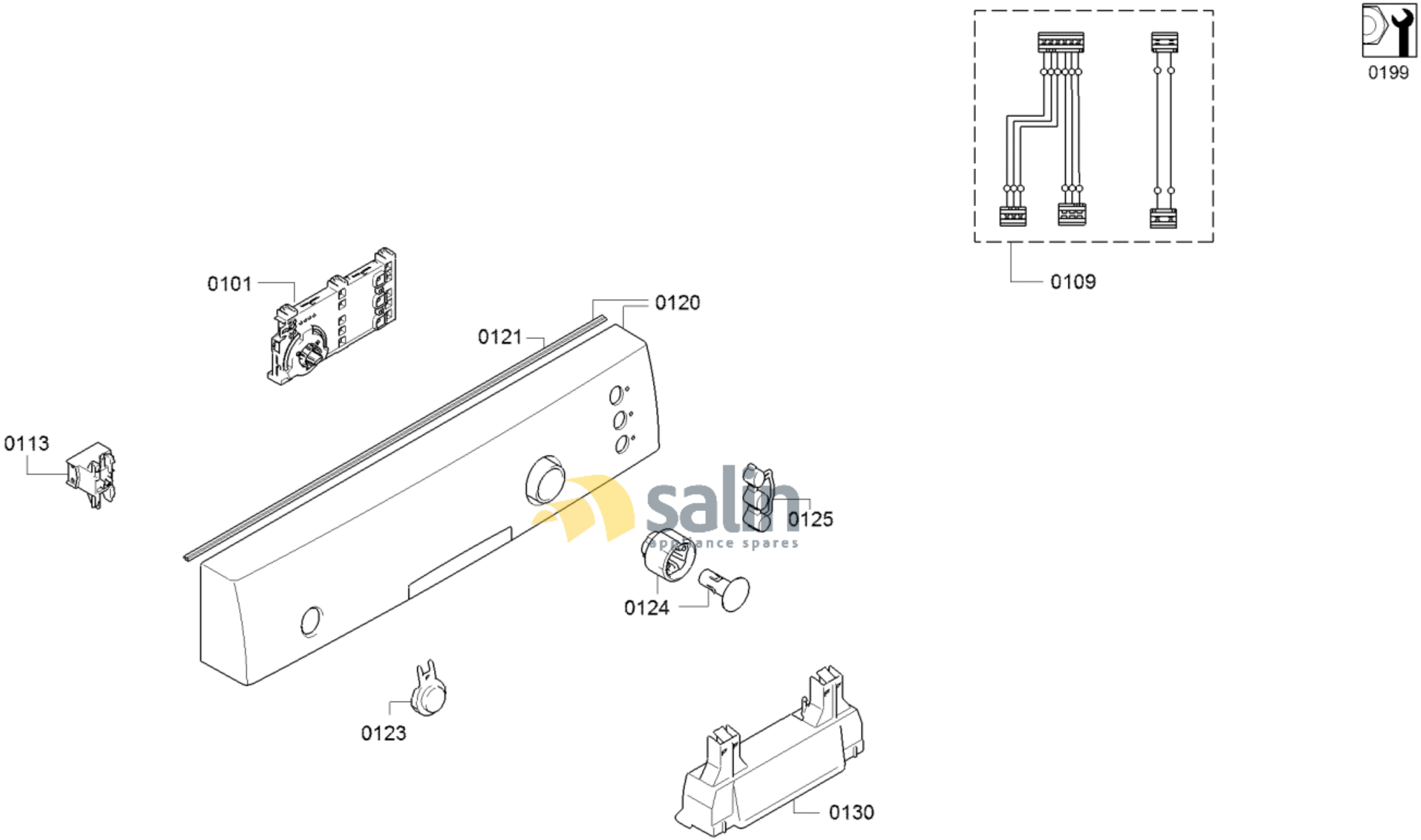

58300000189079 aet 000 b 1/6

FAMILY : SPS40E32RU

MODEL NO: SPS40E32RU/40

Check Position No/Part No or Replacement No

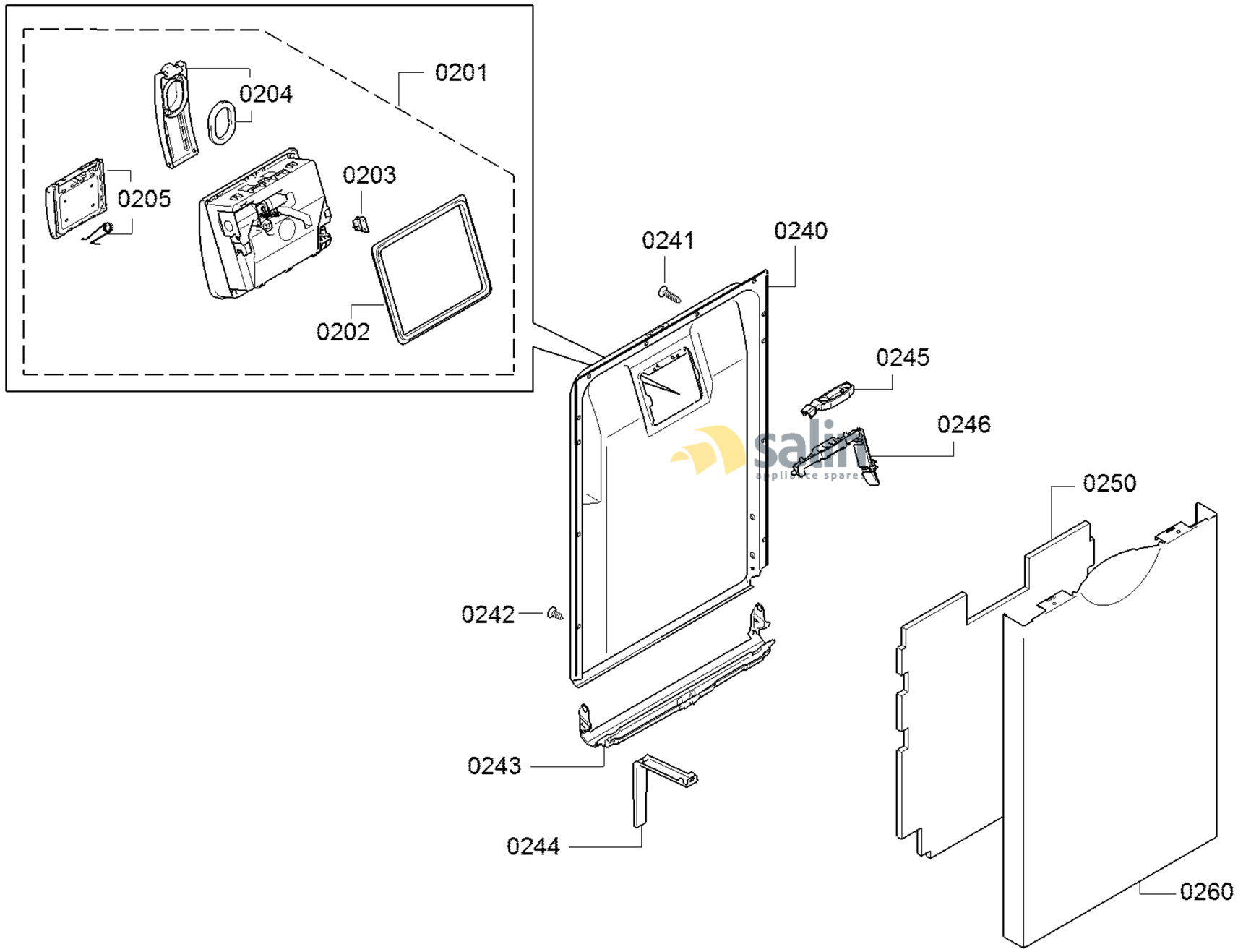

58300000189079 aet 000 b 2/6

FAMILY : SPS40E32RU
MODEL NO: SPS40E32RU/40
Check Position No/Part No or Replacement No

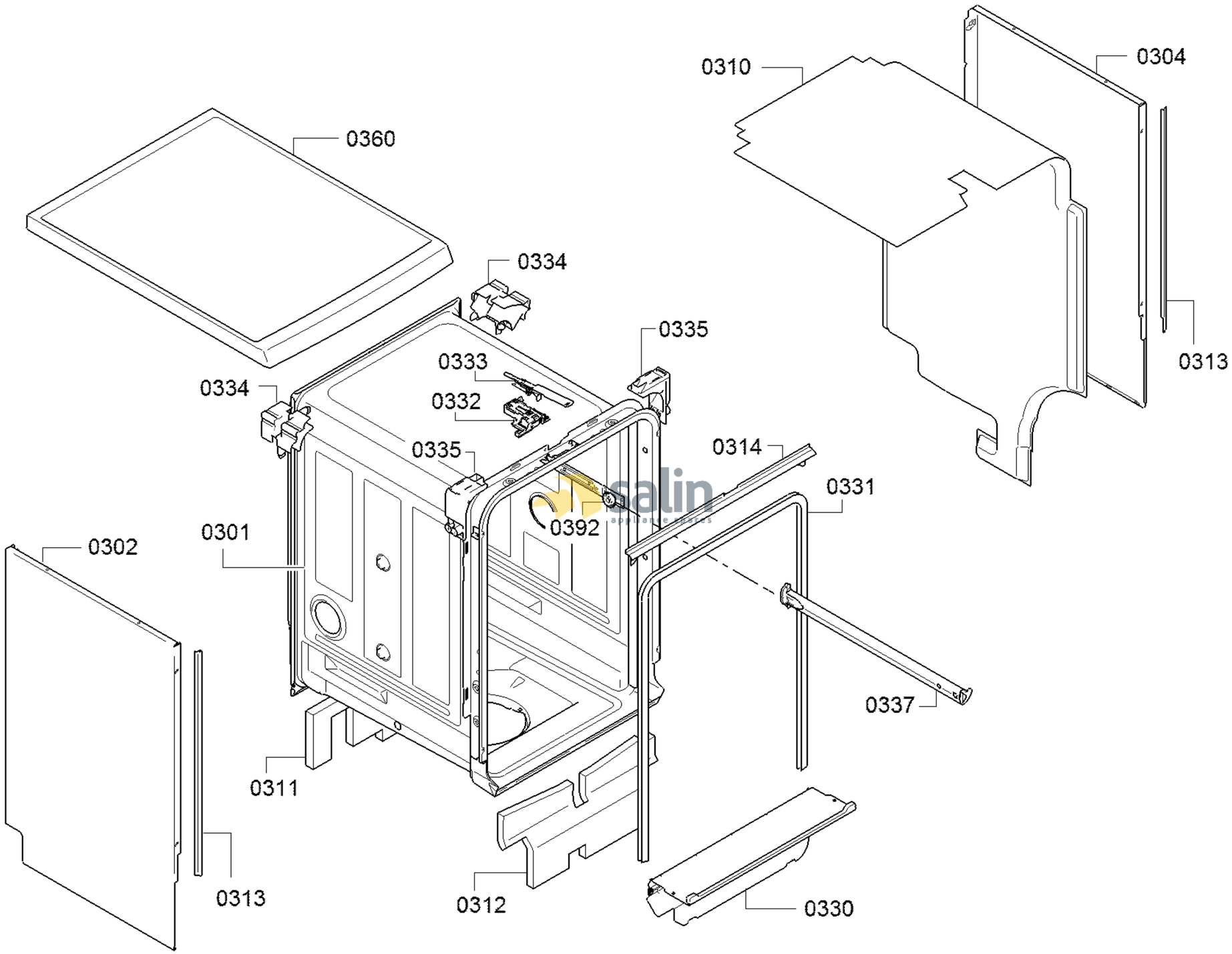

58300000189079 aet 000 b 3/6

FAMILY : SPS40E32RU
MODEL NO: SPS40E32RU/40
Check Position No/Part No or Replacement No

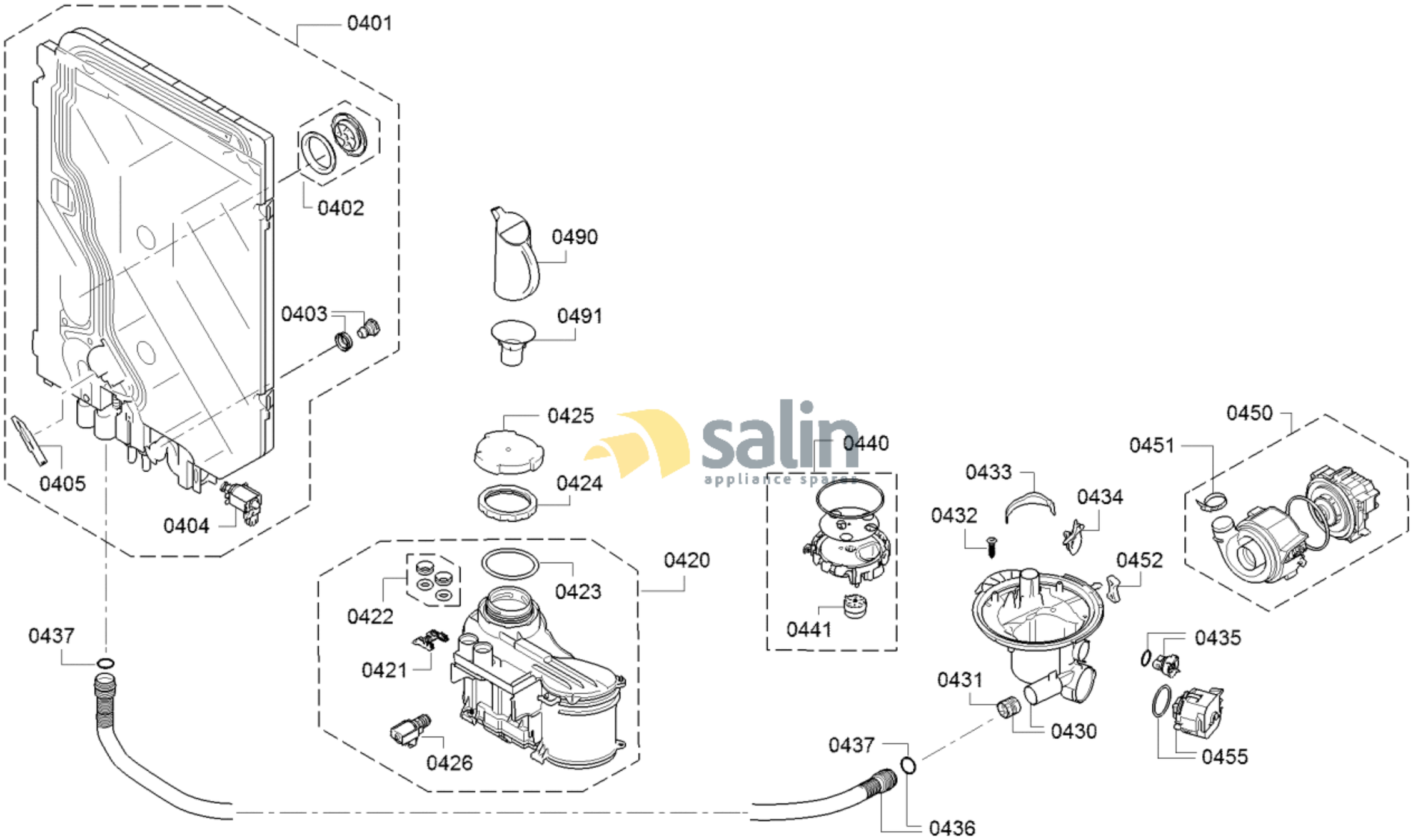

58300000189079 aet 000 b 4/6

FAMILY : SPS40E32RU

MODEL NO: SPS40E32RU/40

Check Position No/Part No or Replacement No

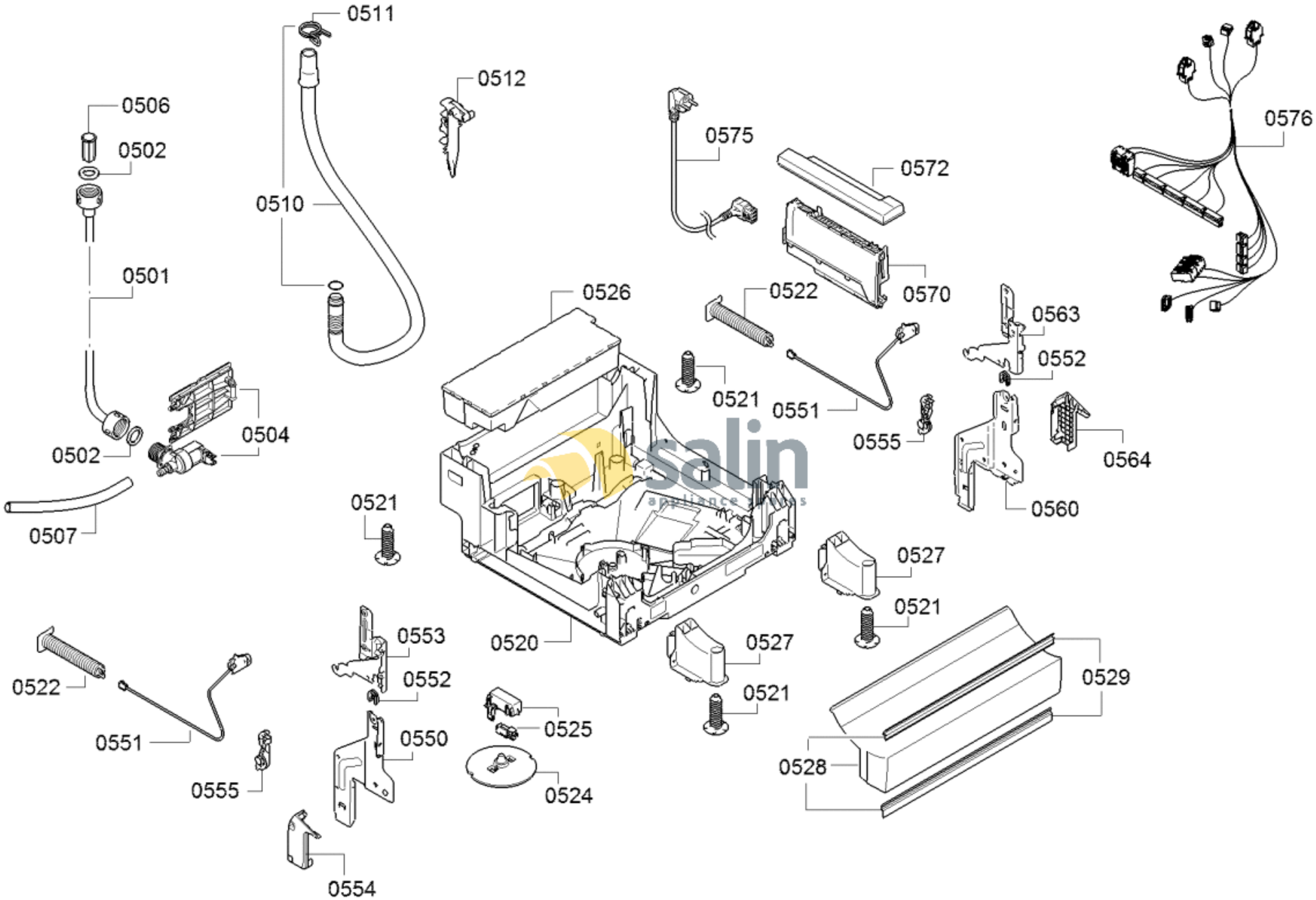

58300000189079 aet 000 b 5/6

FAMILY : SPS40E32RU

MODEL NO: SPS40E32RU/40

Check Position No/Part No or Replacement No

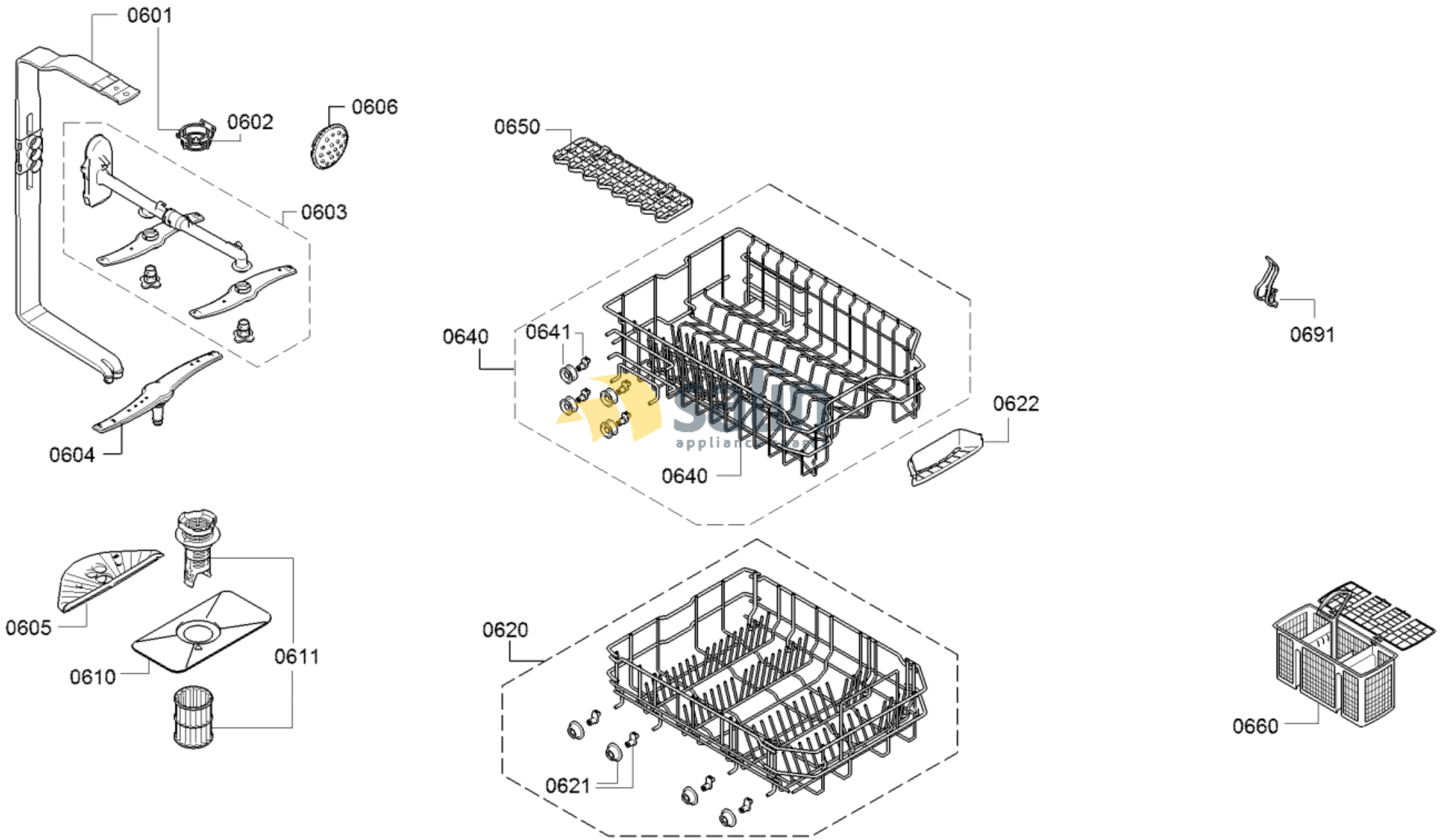

58300000189079 aet 000 b 6/6

FAMILY : SPS40E32RU

MODEL NO: SPS40E32RU/40

Check Position No/Part No or Replacement No