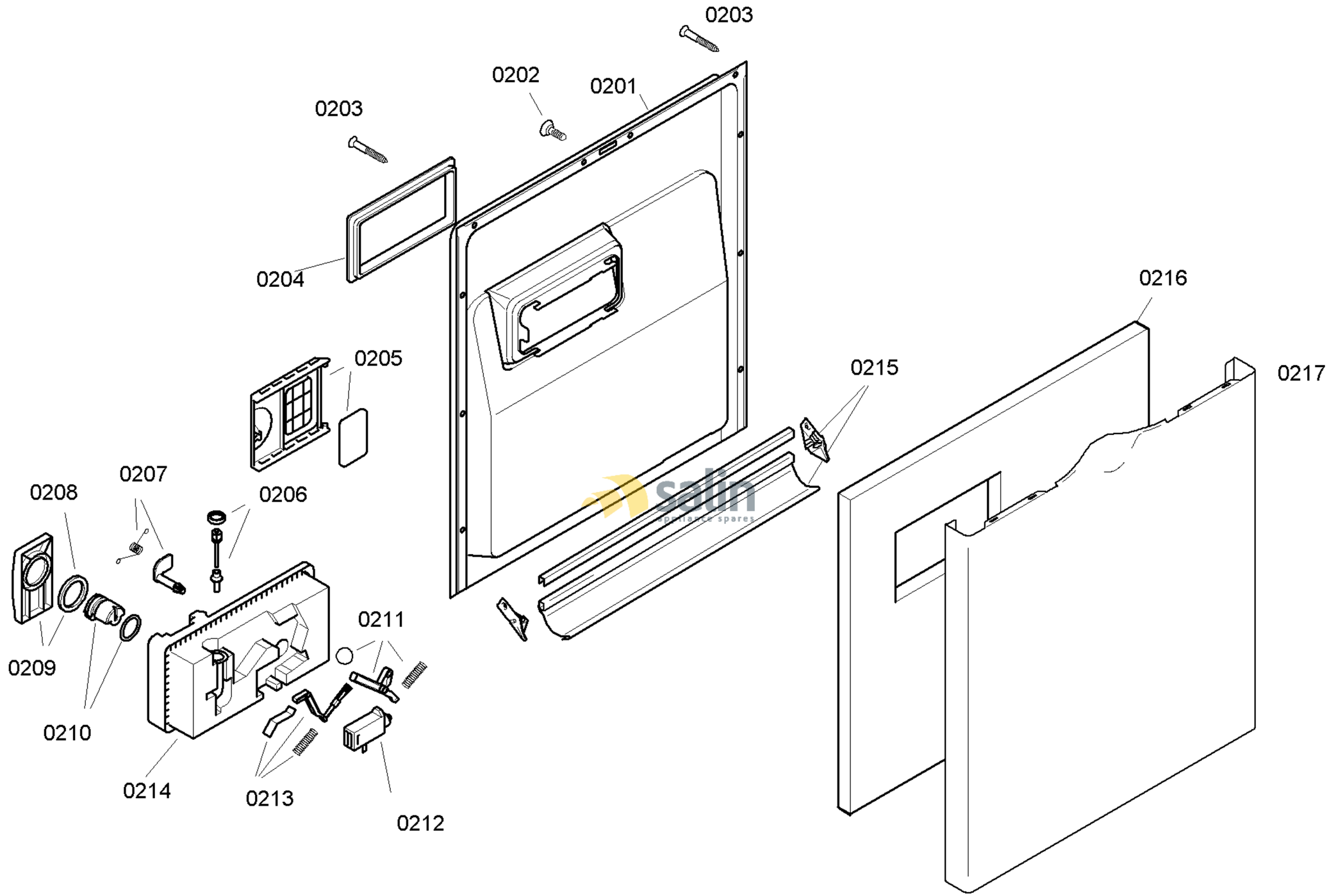

58300000107996 aet 000 b 2/6

FAMILY : SGS45M18EU
MODEL NO: SGS45M18EU/74
Check Position No/Part No or Replacement No

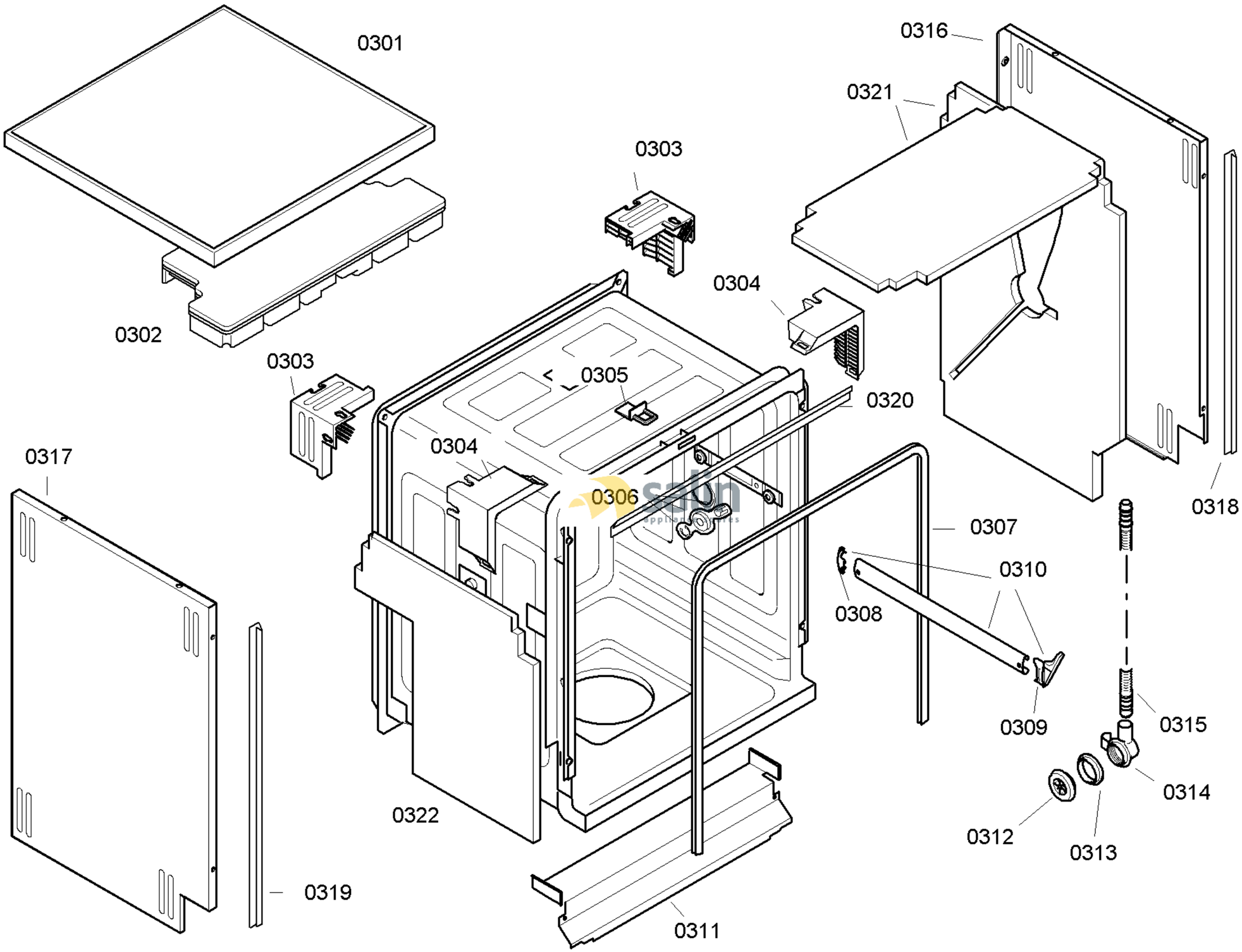

58300000107996 aet 000 b 3/6

FAMILY : SGS45M18EU
MODEL NO: SGS45M18EU/74
Check Position No/Part No or Replacement No

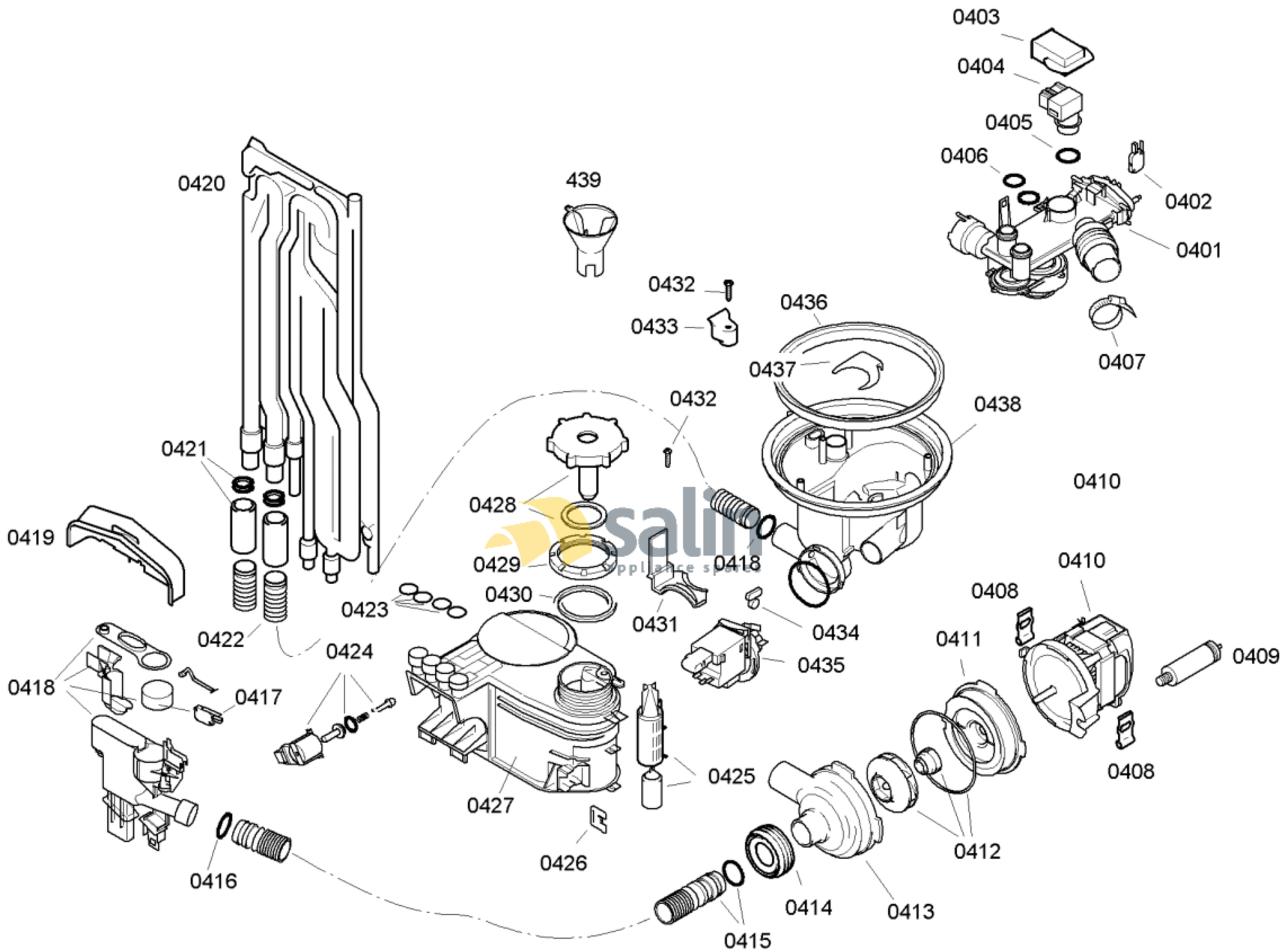

58300000107996 aet 000 b 4/6

FAMILY : SGS45M18EU

MODEL NO: SGS45M18EU/74

Check Position No/Part No or Replacement No

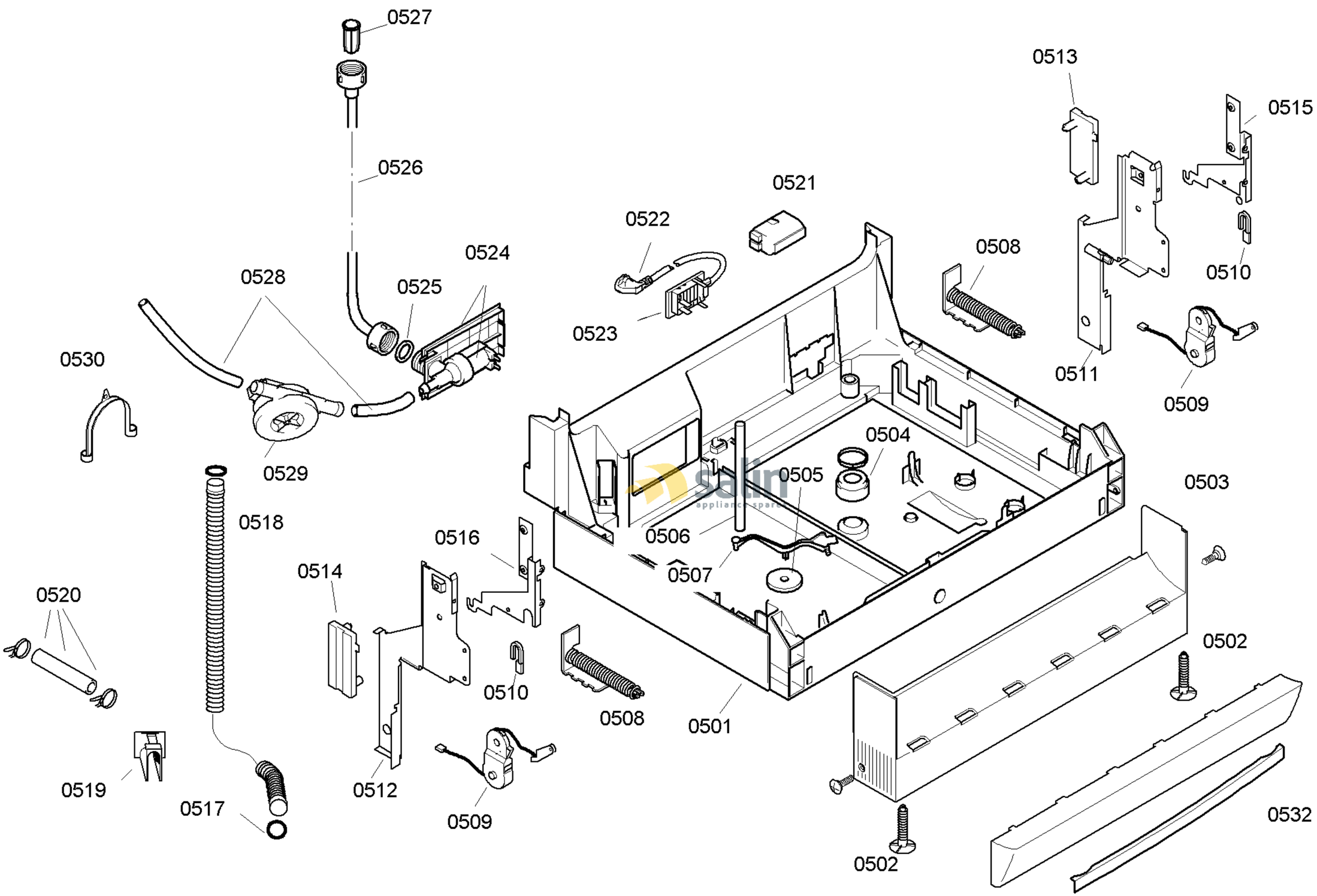

58300000107996 aet 000 b 5/6

FAMILY : SGS45M18EU
MODEL NO: SGS45M18EU/74
Check Position No/Part No or Replacement No

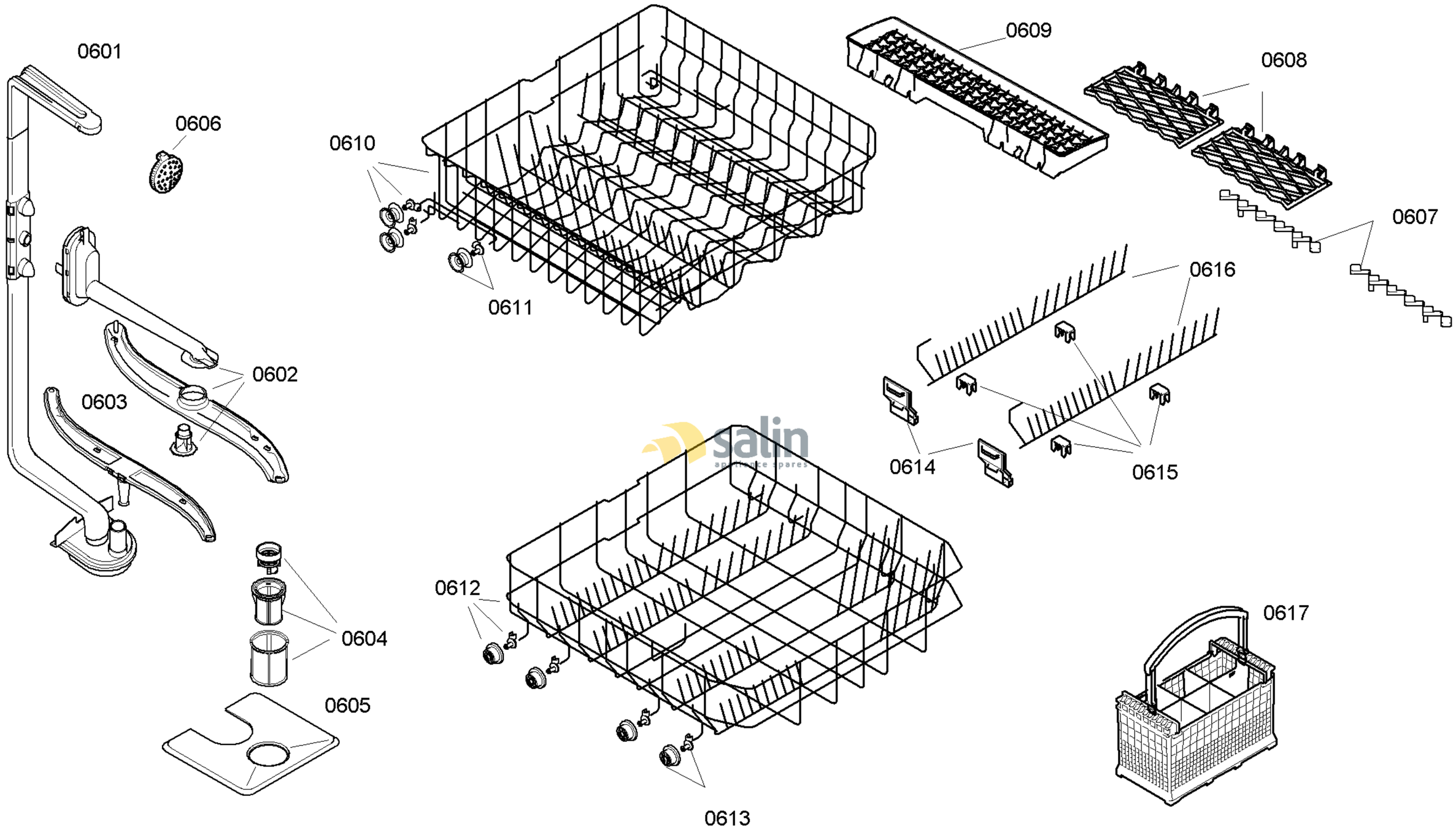

58300000107996 aet 000 b 6/6

FAMILY : SGS45M18EU
MODEL NO: SGS45M18EU/74
Check Position No/Part No or Replacement No