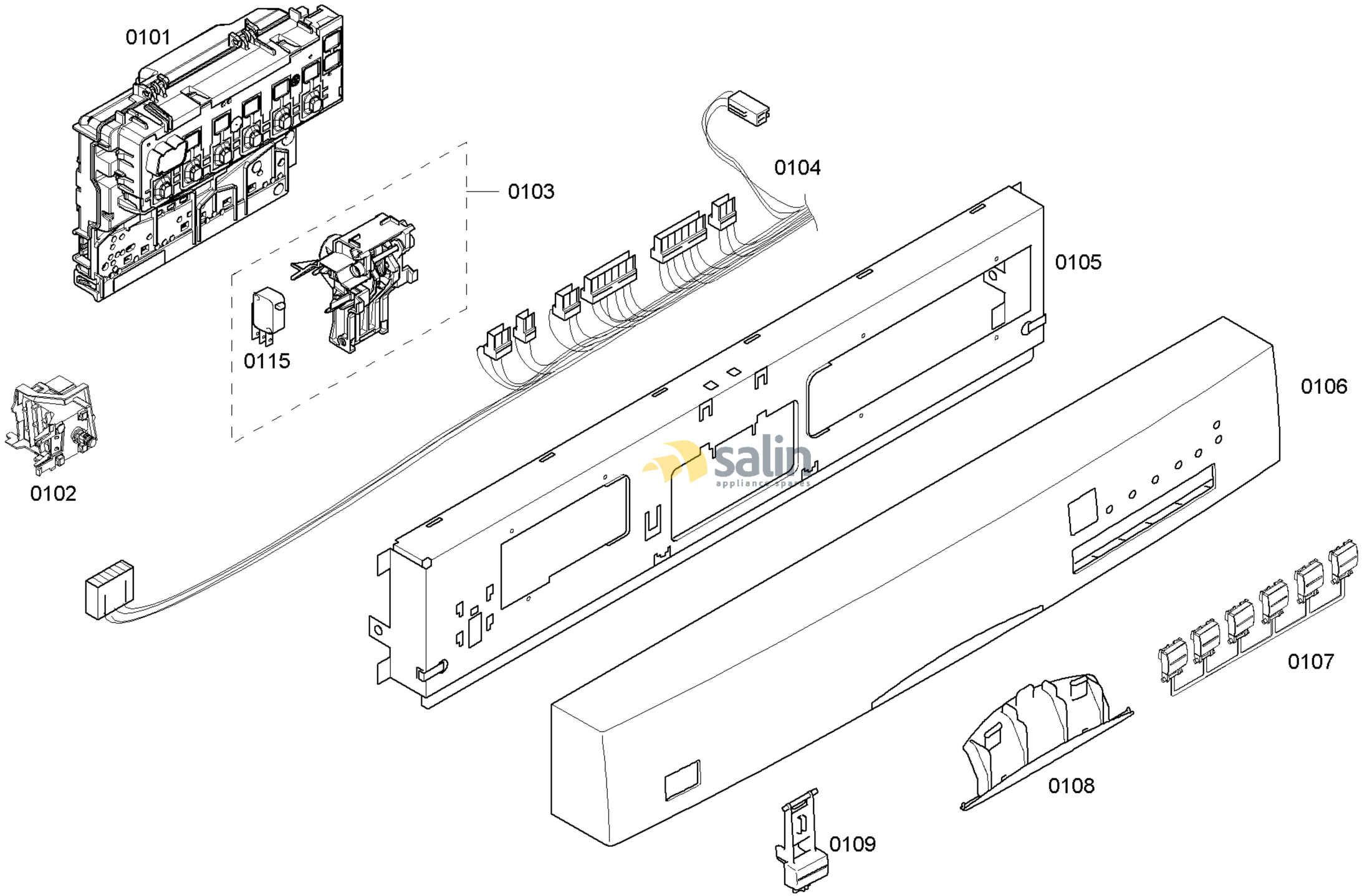

58300000125397 aet 000 a 1/6

FAMILY : SHE45M02UC
MODEL NO: SHE45M02UC/46
Check Position No/Part No or Replacement No

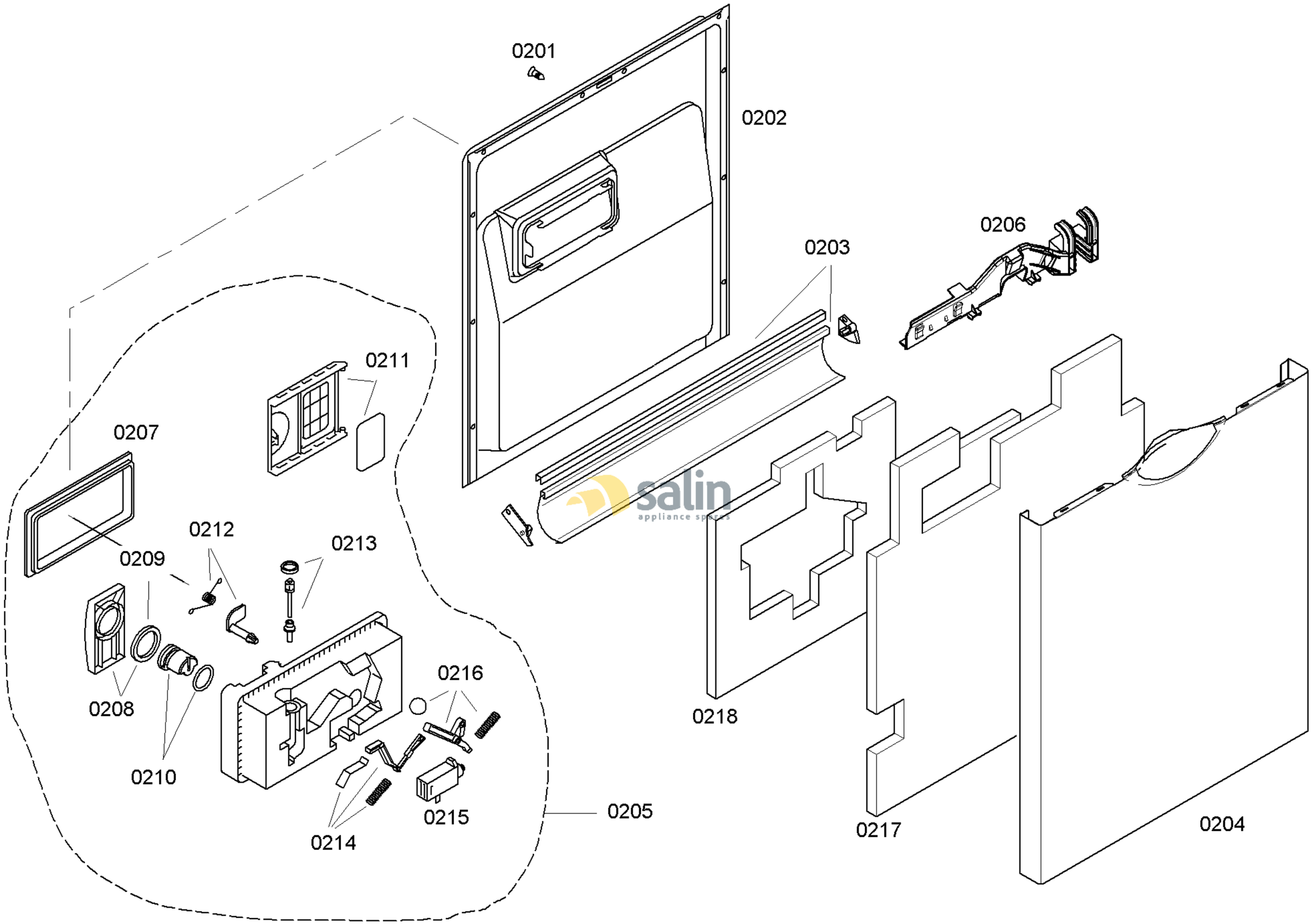

58300000125397 aet 000 a 2/6

FAMILY : SHE45M02UC
MODEL NO: SHE45M02UC/46
Check Position No/Part No or Replacement No

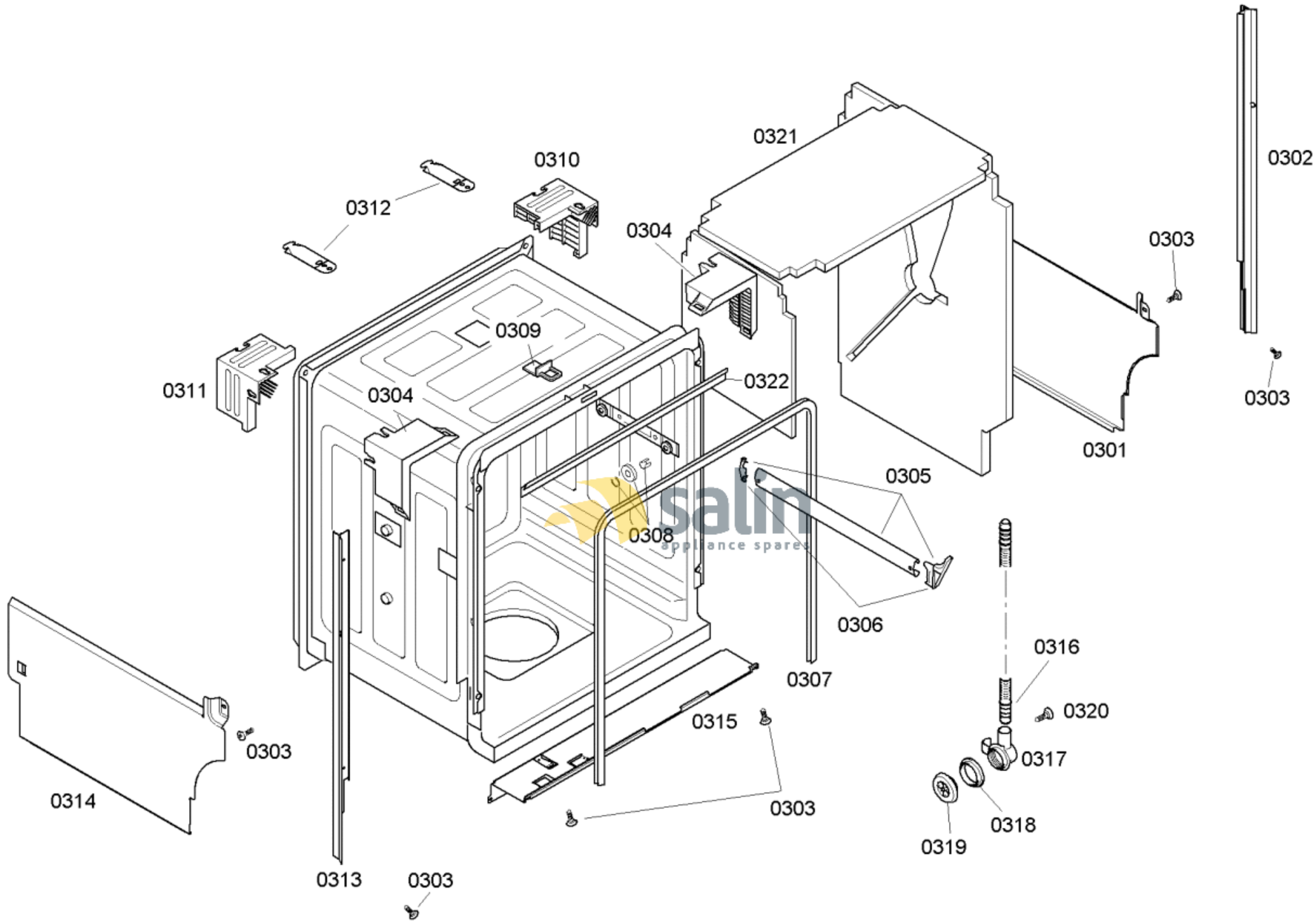

58300000125397 aet 000 a 3/6

FAMILY : SHE45M02UC

MODEL NO: SHE45M02UC/46

Check Position No/Part No or Replacement No

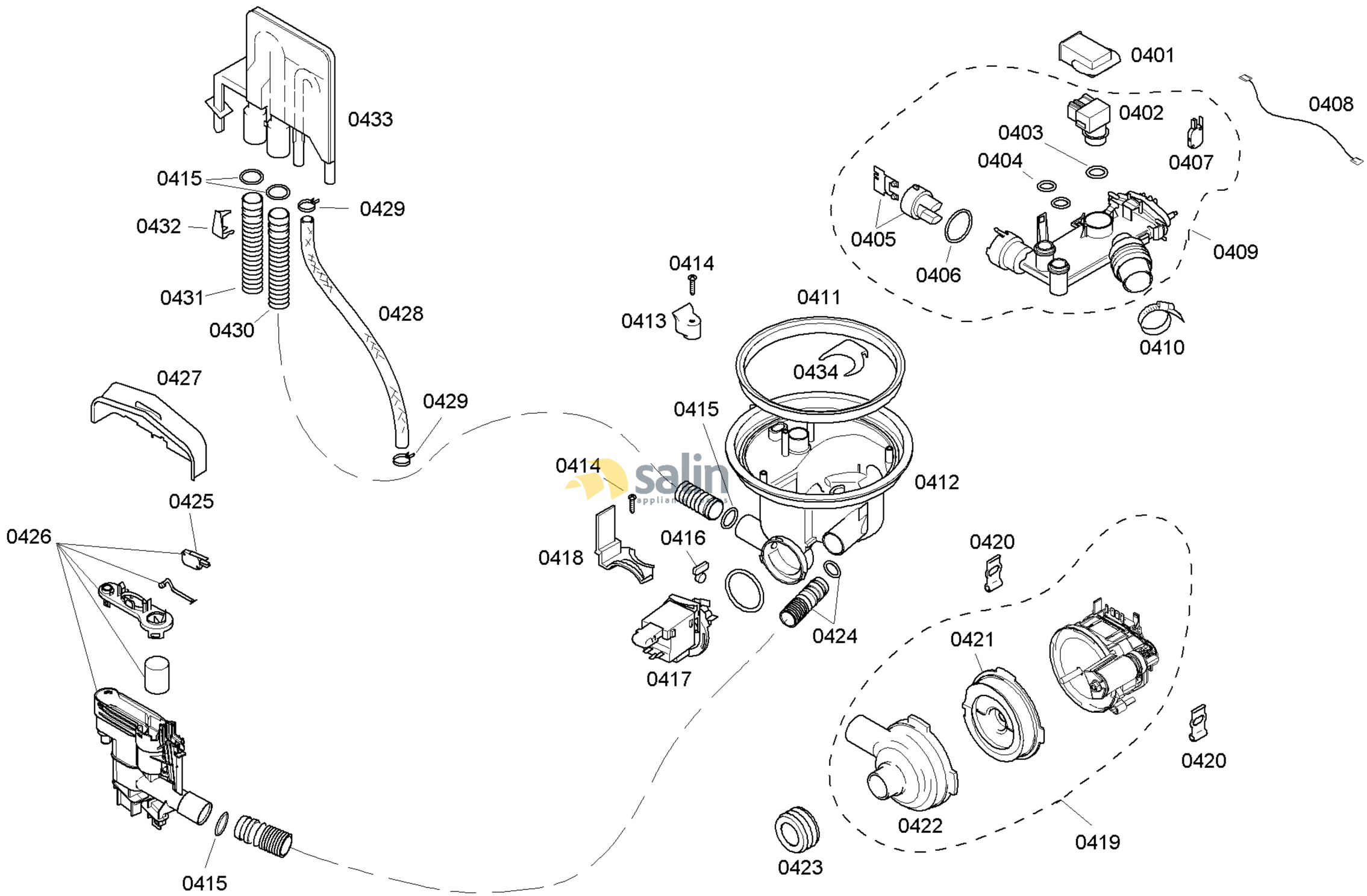

58300000125397 aet 000 a 4/6

FAMILY : SHE45M02UC
MODEL NO: SHE45M02UC/46
Check Position No/Part No or Replacement No

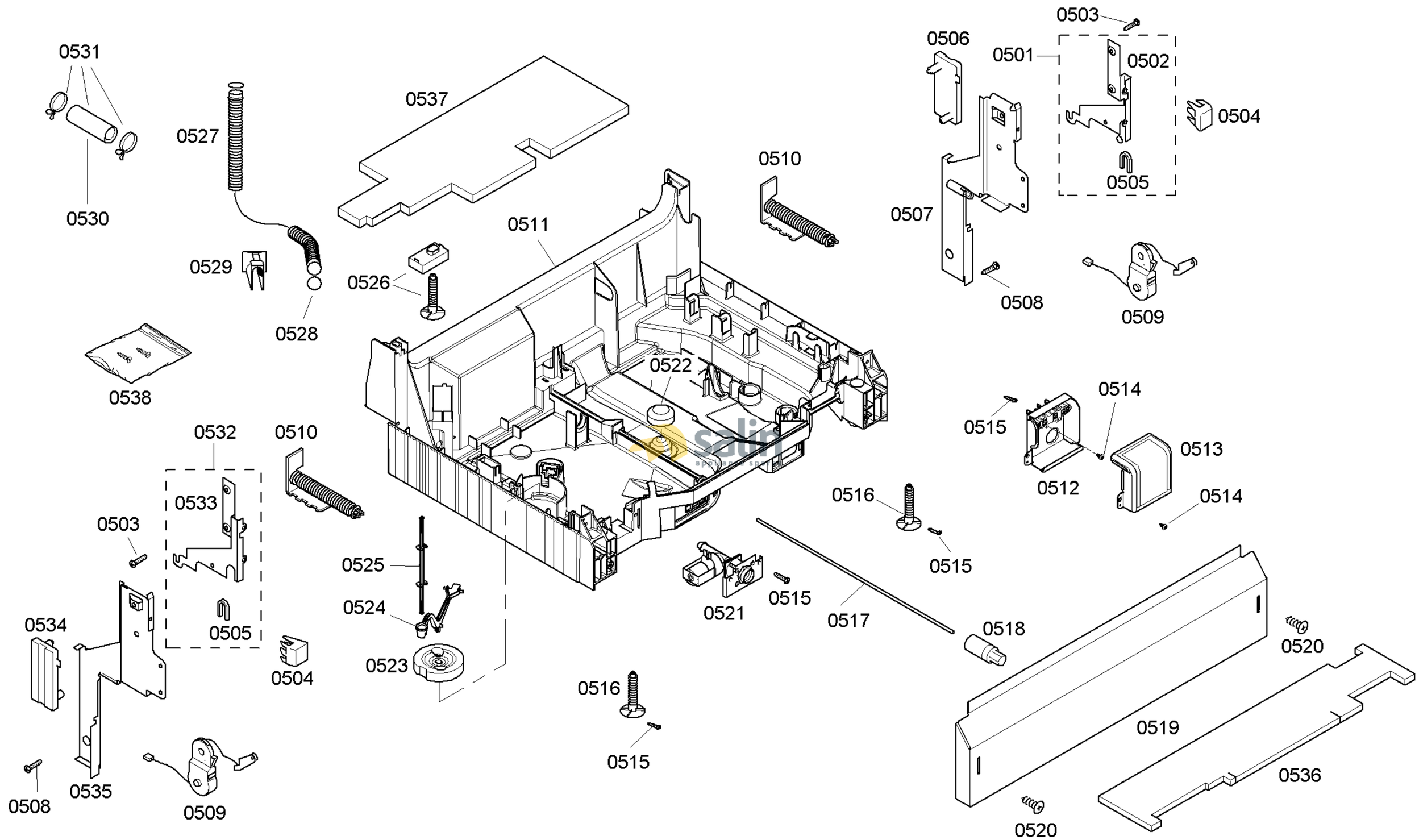

58300000125397 aet 000 a 5/6

FAMILY : SHE45M02UC
MODEL NO: SHE45M02UC/46
Check Position No/Part No or Replacement No

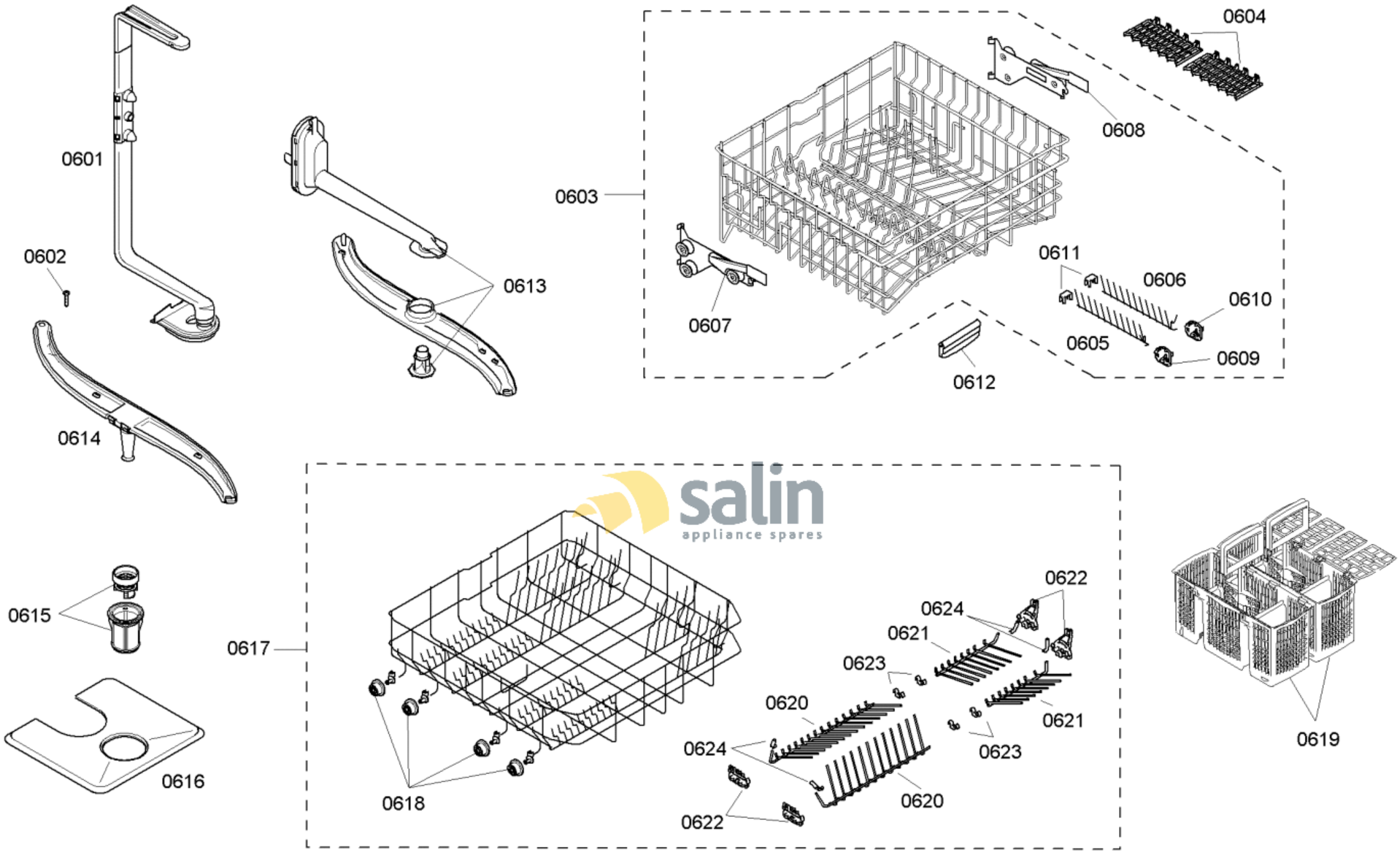

58300000125397 aet 000 a 6/6

FAMILY : SHE45M02UC

MODEL NO: SHE45M02UC/46

Check Position No/Part No or Replacement No