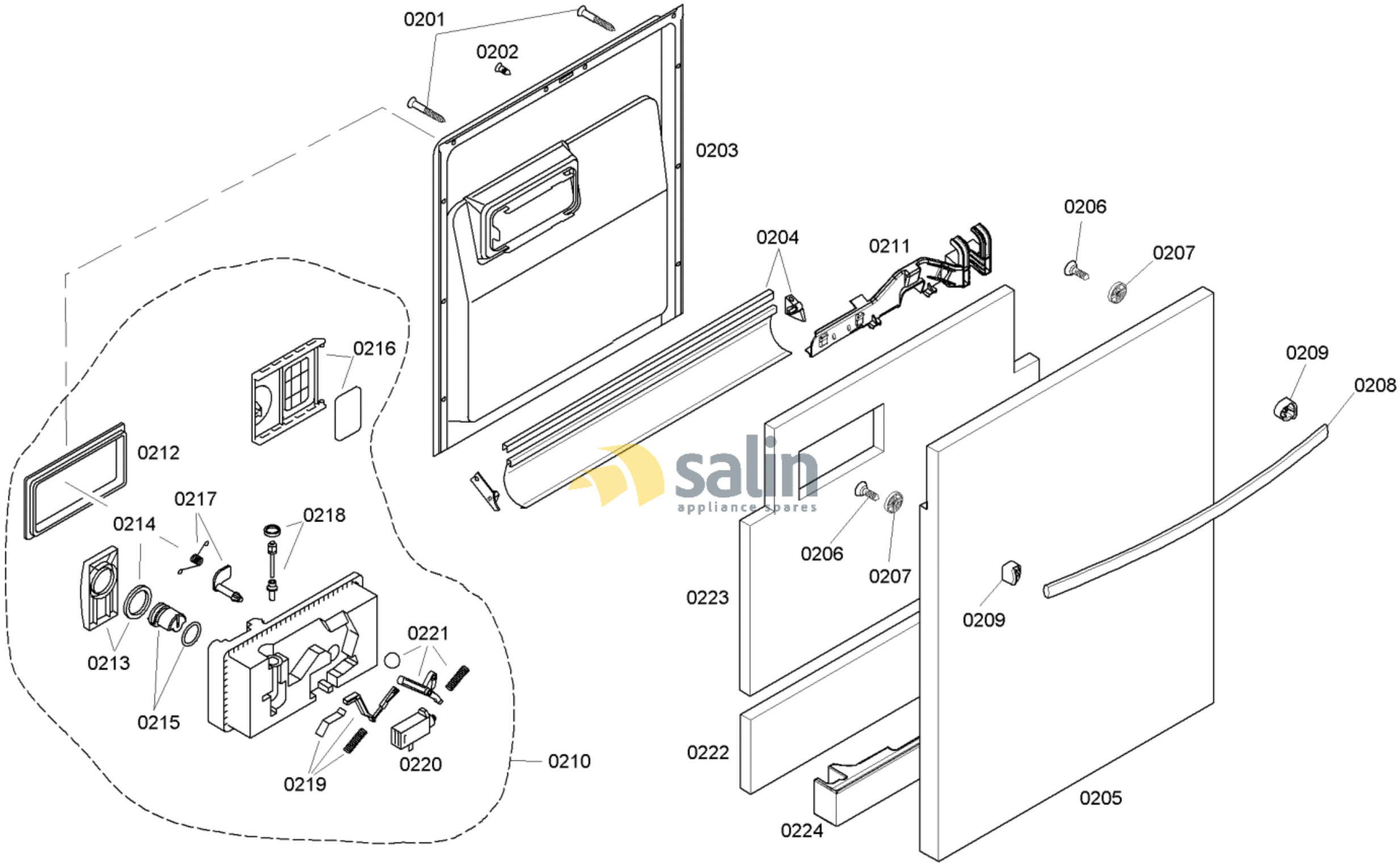

58300000119914 aet 000 b 2/6

FAMILY : SHX33A05UC

MODEL NO: SHX33A05UC/36

Check Position No/Part No or Replacement No

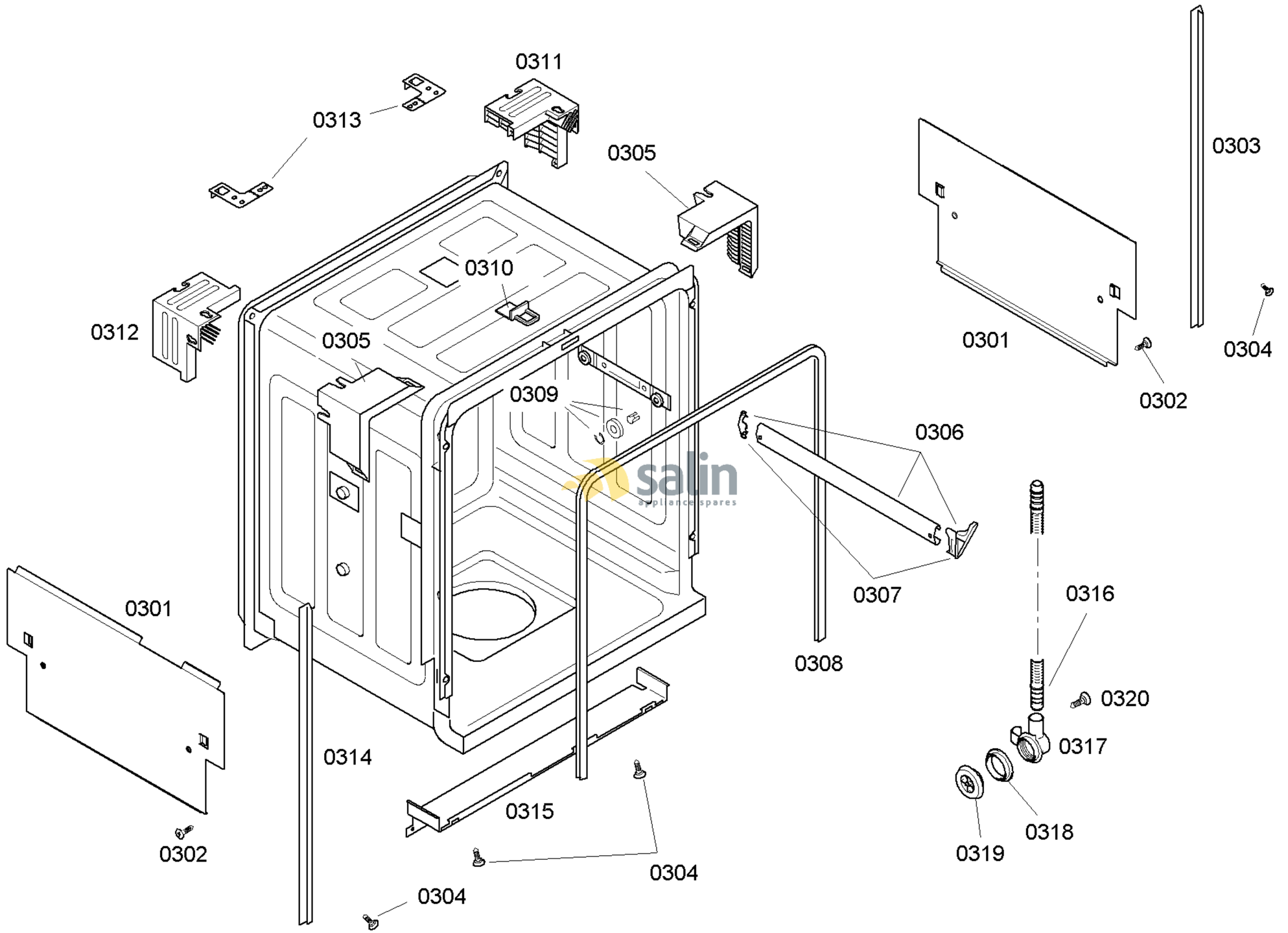

58300000119914 aet 000 b 3/6

FAMILY : SHX33A05UC
MODEL NO: SHX33A05UC/36
Check Position No/Part No or Replacement No

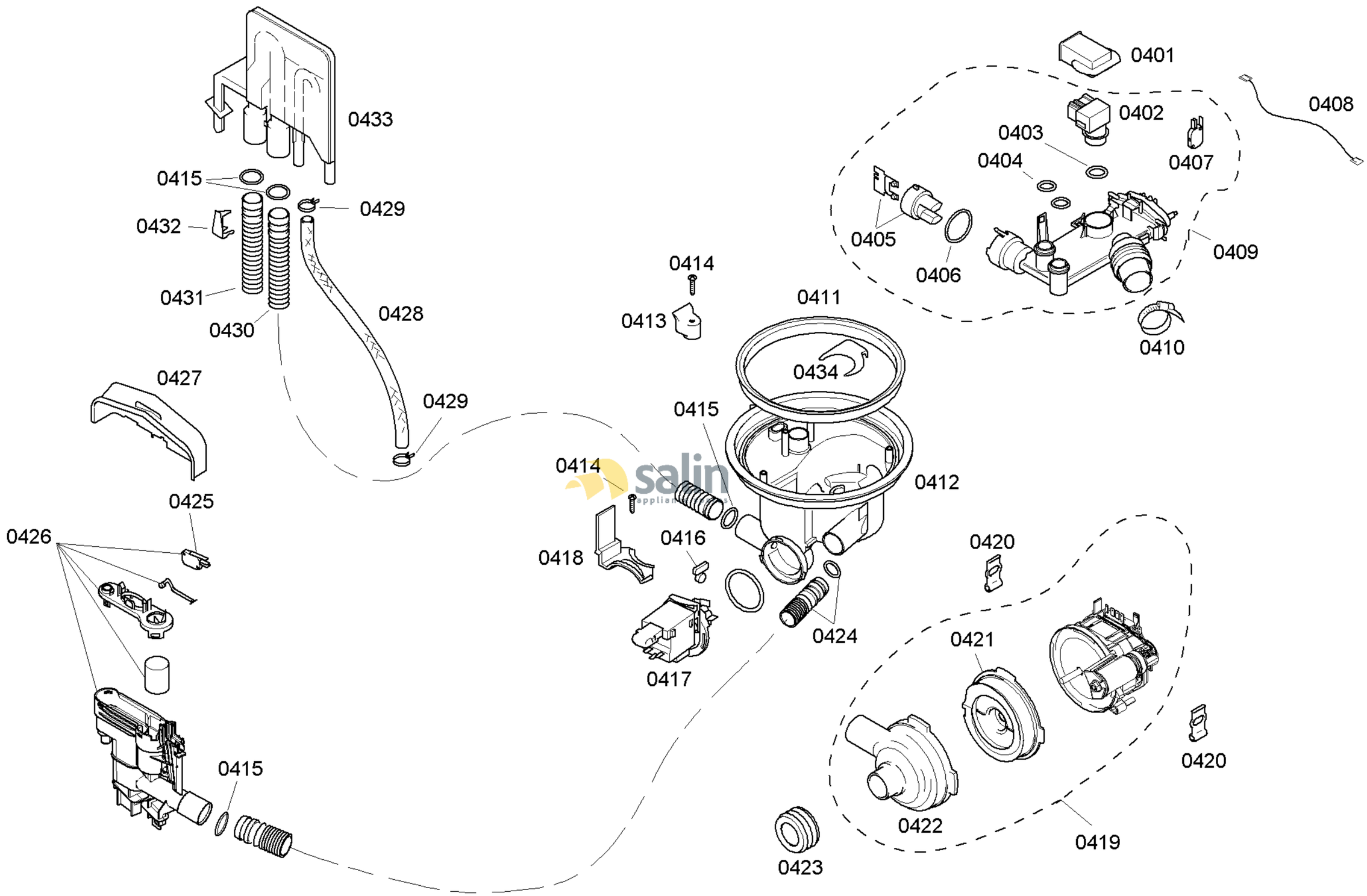

58300000119914 aet 000 b 4/6

FAMILY : SHX33A05UC
MODEL NO: SHX33A05UC/36
Check Position No/Part No or Replacement No

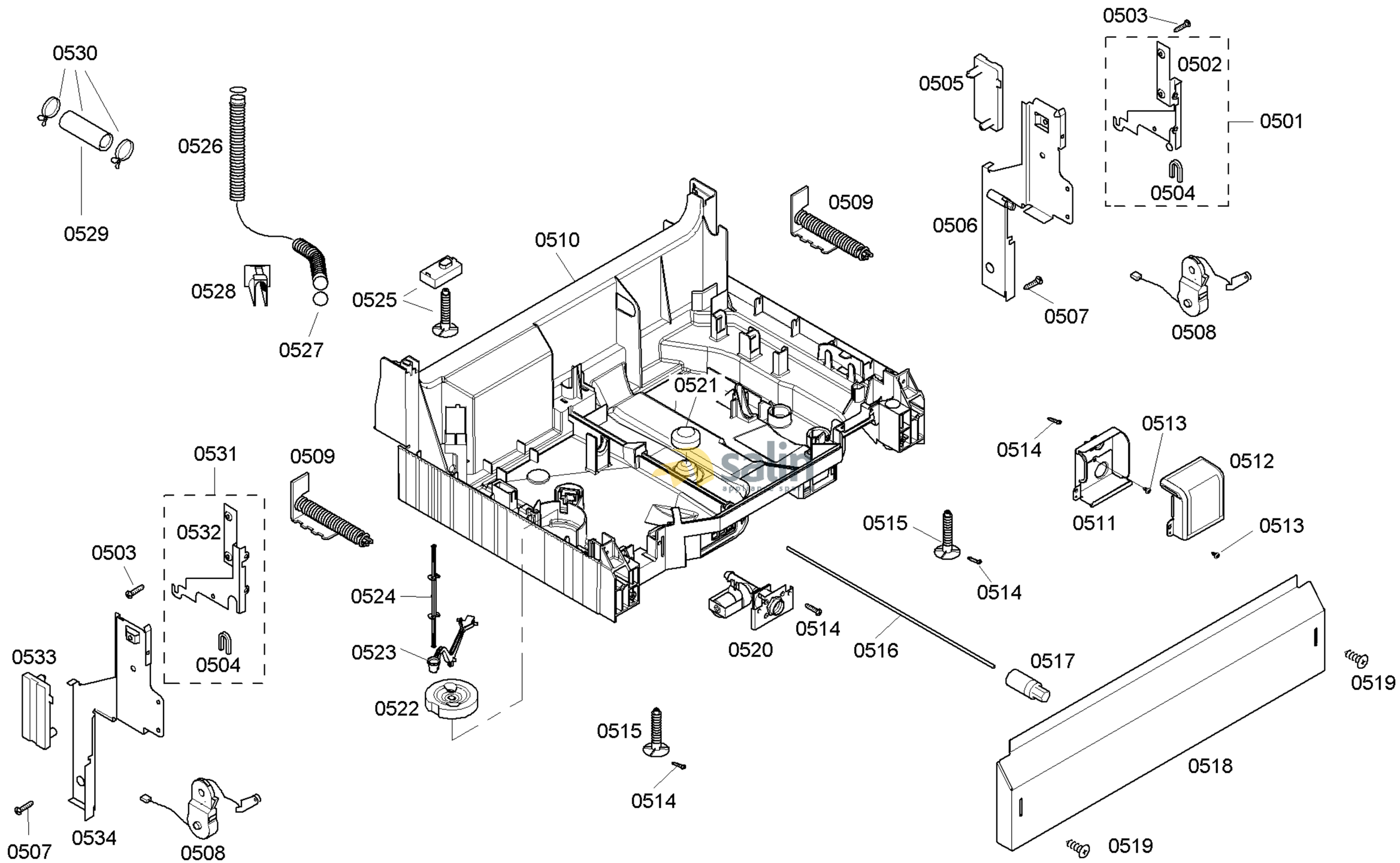

58300000119914 aet 000 b 5/6

FAMILY : SHX33A05UC
MODEL NO: SHX33A05UC/36
Check Position No/Part No or Replacement No

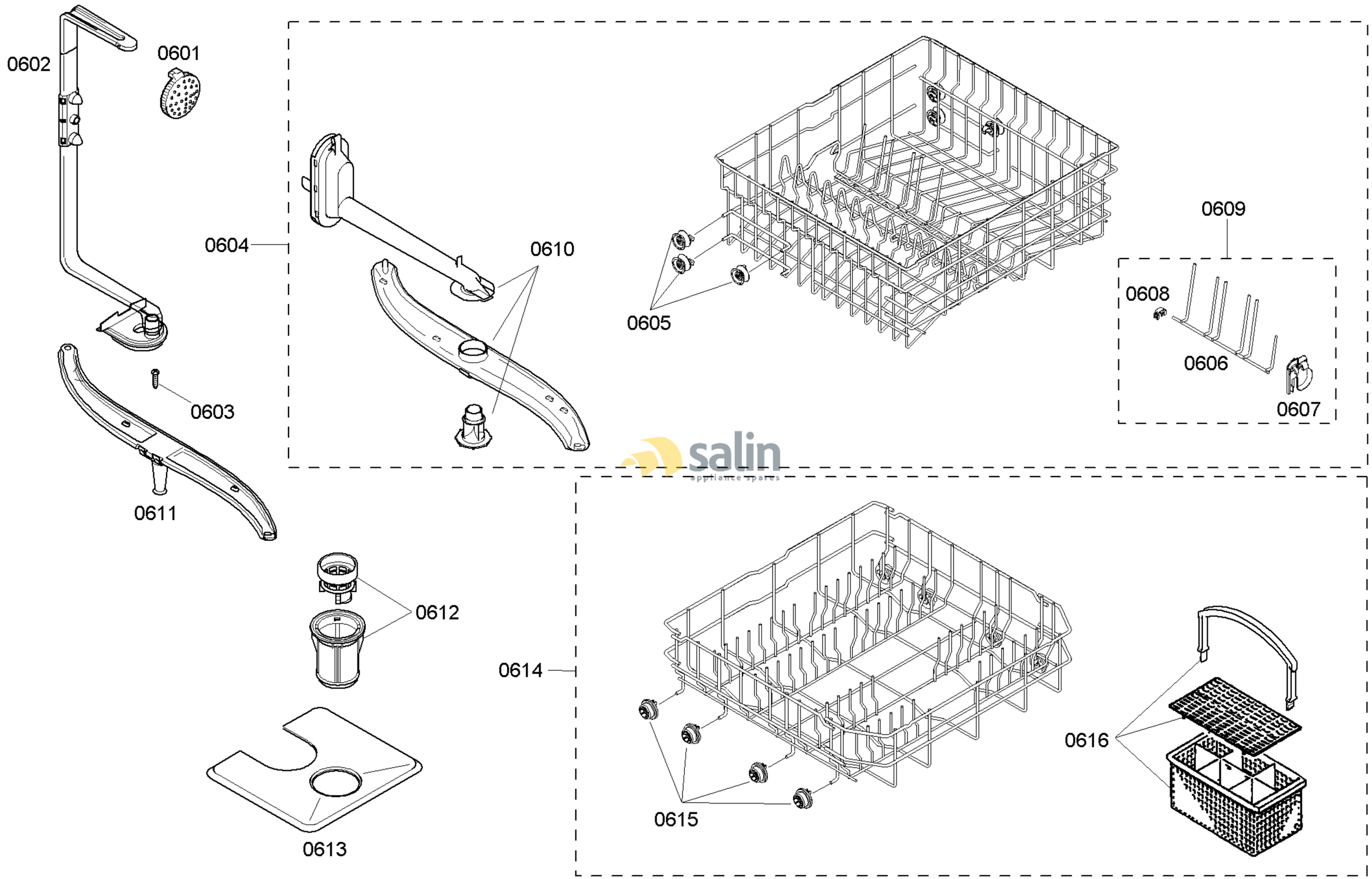

58300000119914 aet 000 b 6/6

FAMILY : SHX33A05UC
MODEL NO: SHX33A05UC/36
Check Position No/Part No or Replacement No