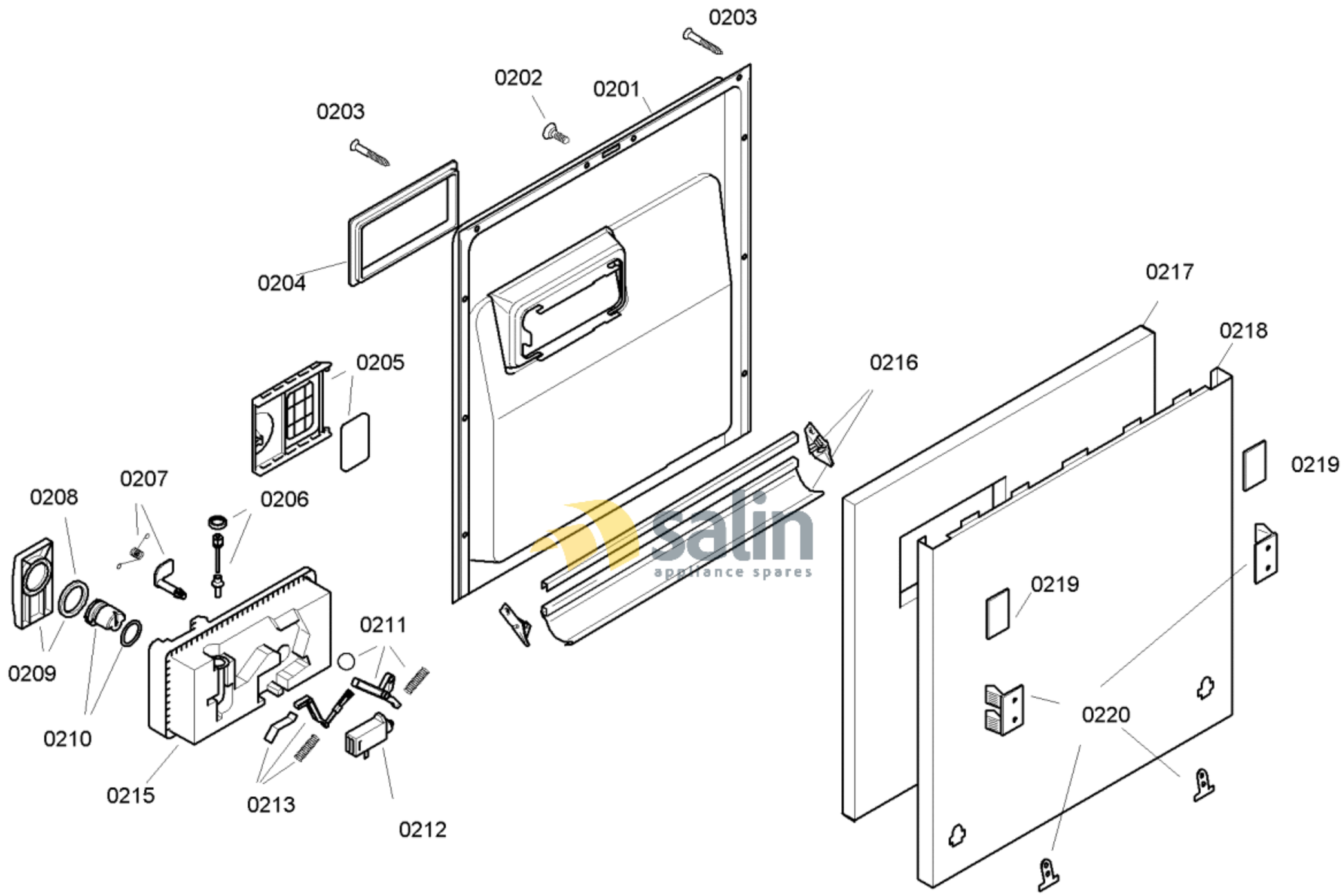

58300000135519 aet 000 a 2/6

FAMILY : SGI55E06EP

MODEL NO: SGI55E06EP/01

Check Position No/Part No or Replacement No

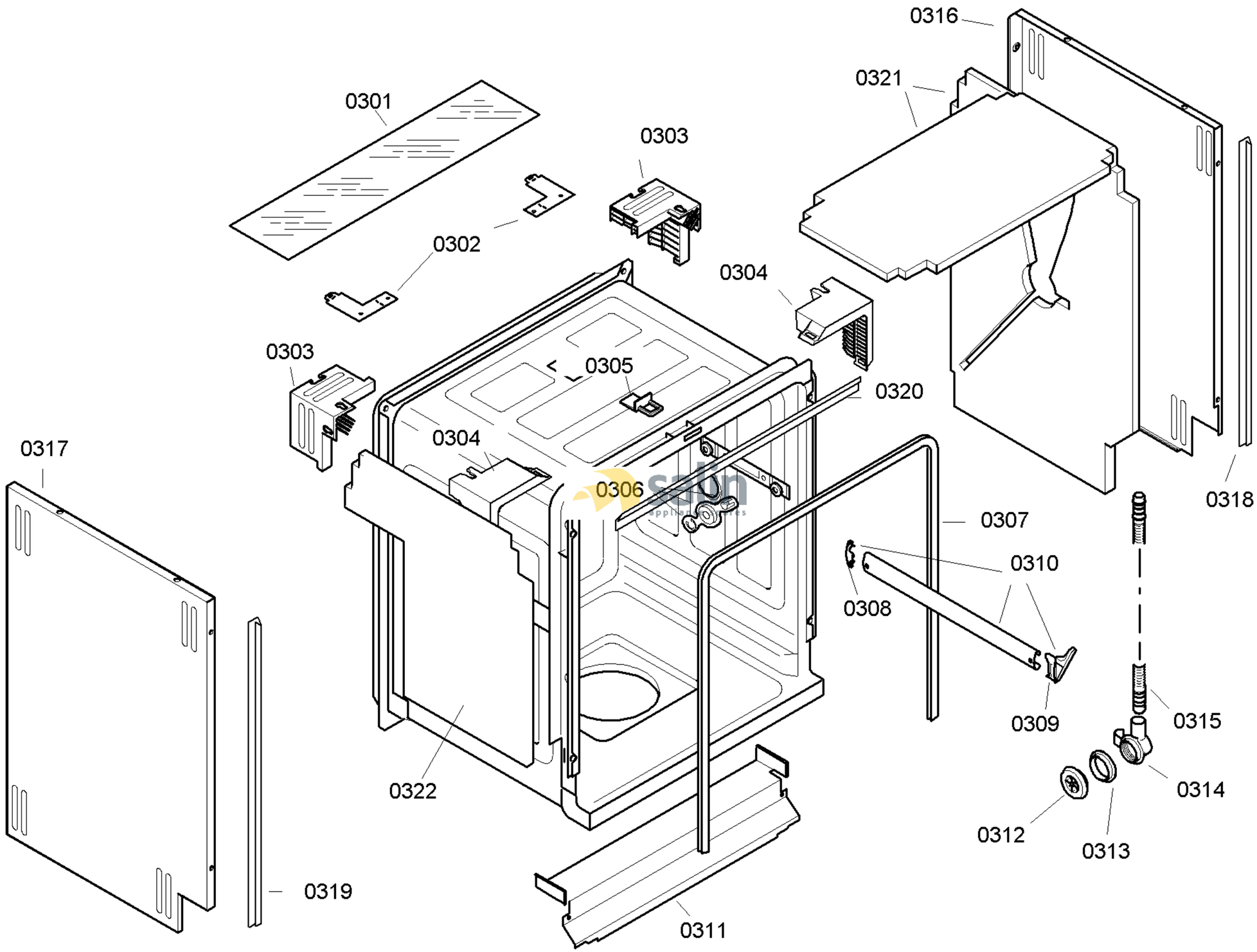

58300000135519 aet 000 a 3/6

FAMILY : SGI55E06EP
MODEL NO: SGI55E06EP/01
Check Position No/Part No or Replacement No

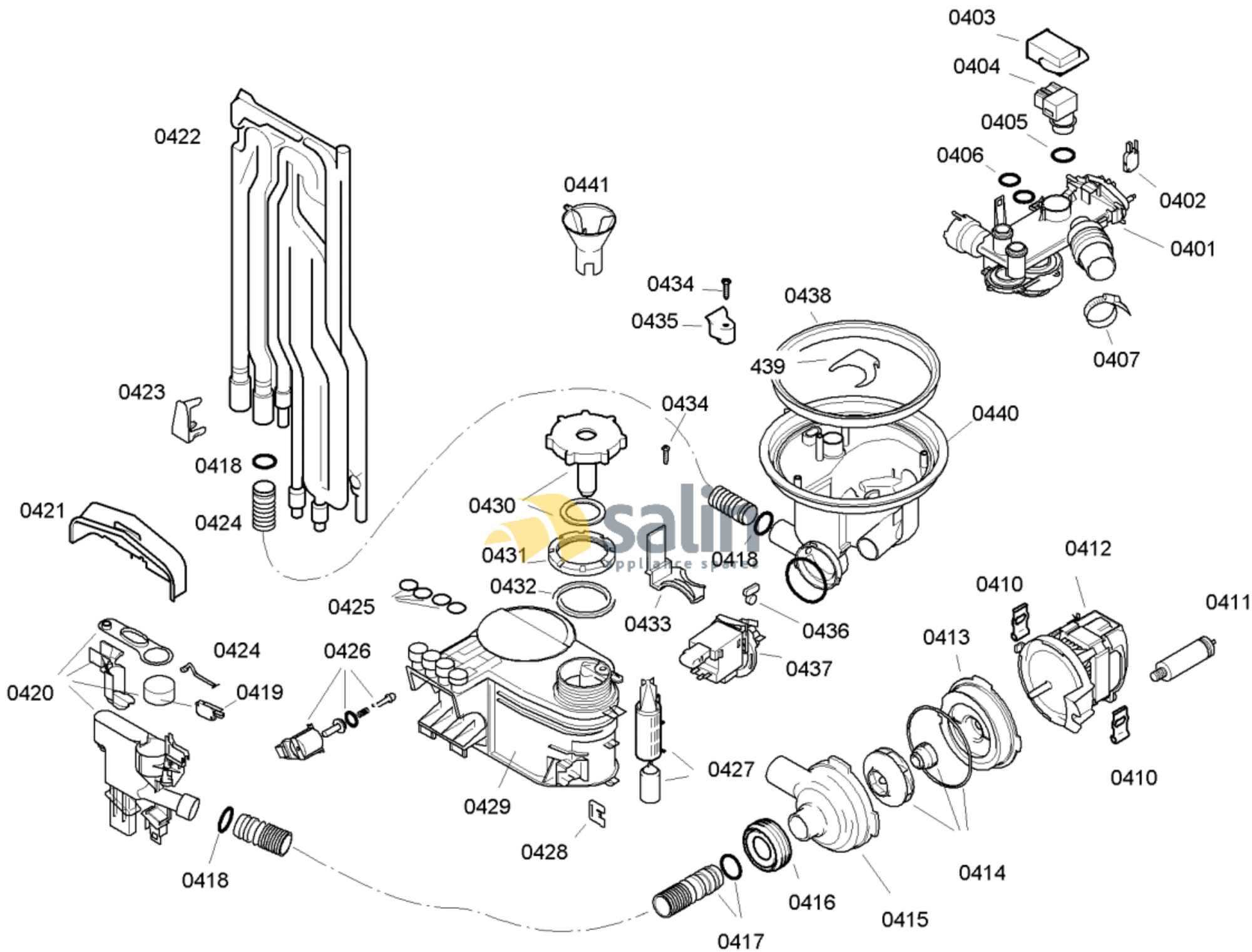

58300000135519 aet 000 a 4/6

FAMILY : SGI55E06EP

MODEL NO: SGI55E06EP/01

Check Position No/Part No or Replacement No

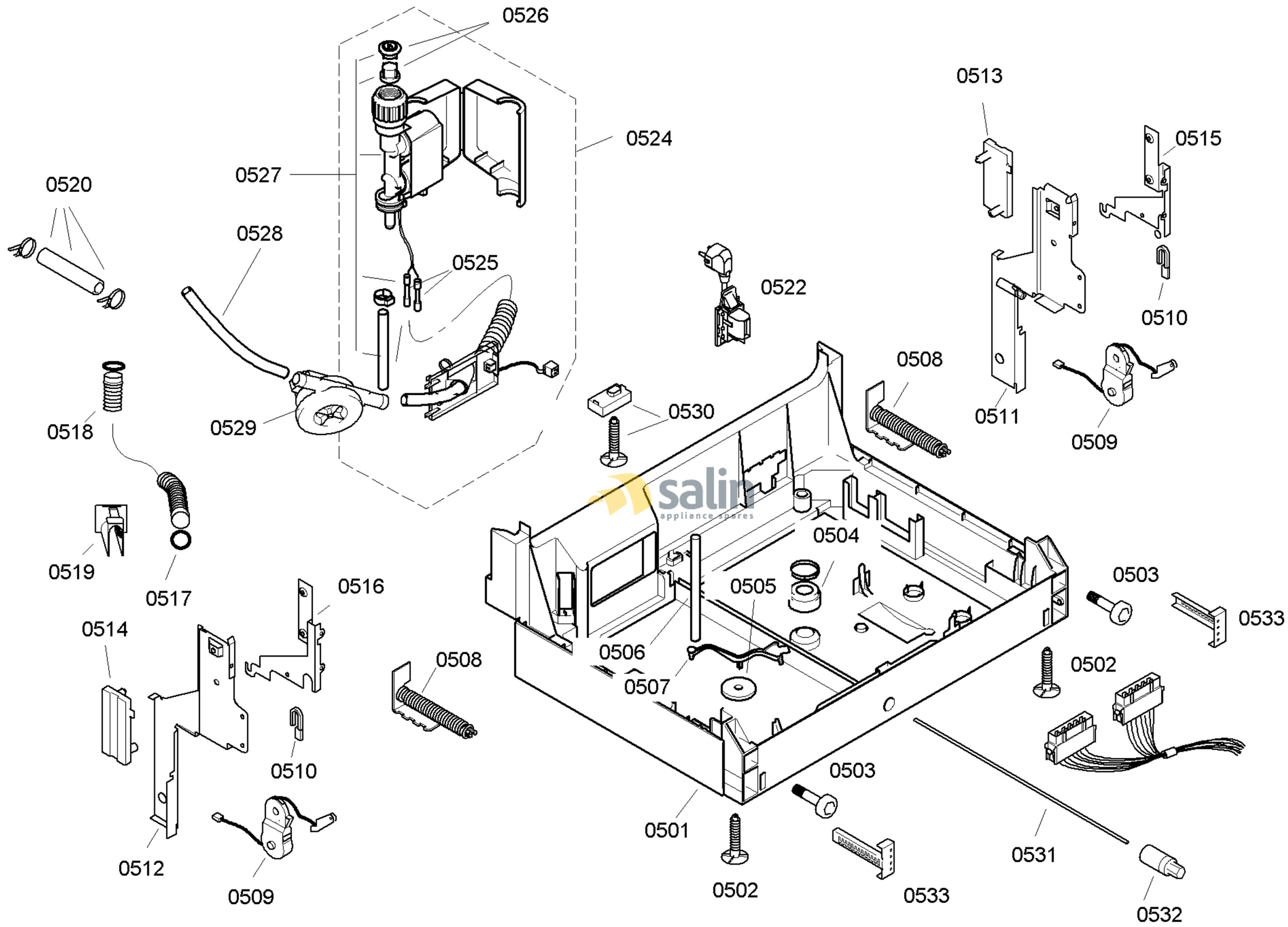

58300000135519 aet 000 a 5/6

FAMILY : SGI55E06EP
MODEL NO: SGI55E06EP/01
Check Position No/Part No or Replacement No

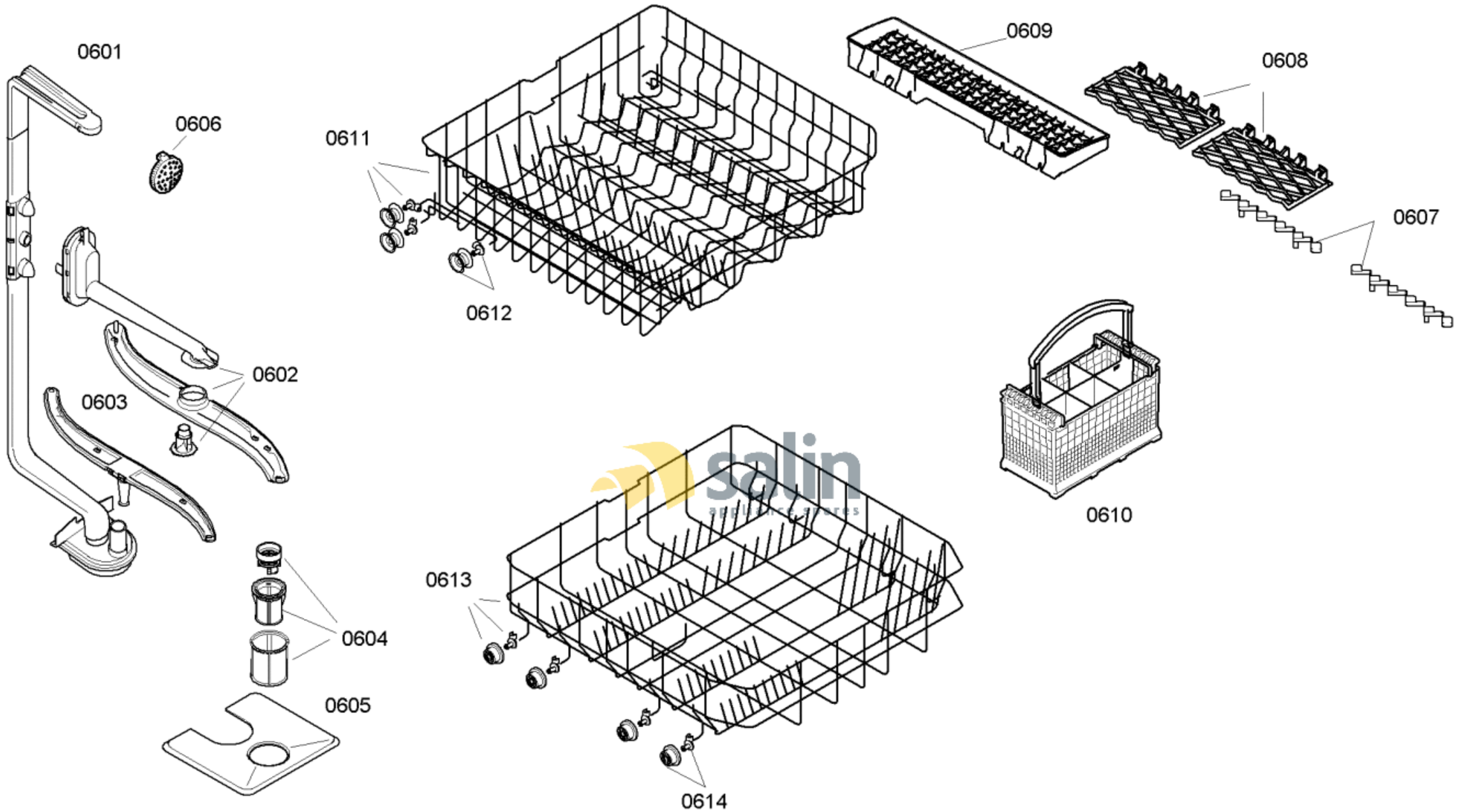

58300000135519 aet 000 a 6/6

FAMILY : SGI55E06EP

MODEL NO: SGI55E06EP/01

Check Position No/Part No or Replacement No