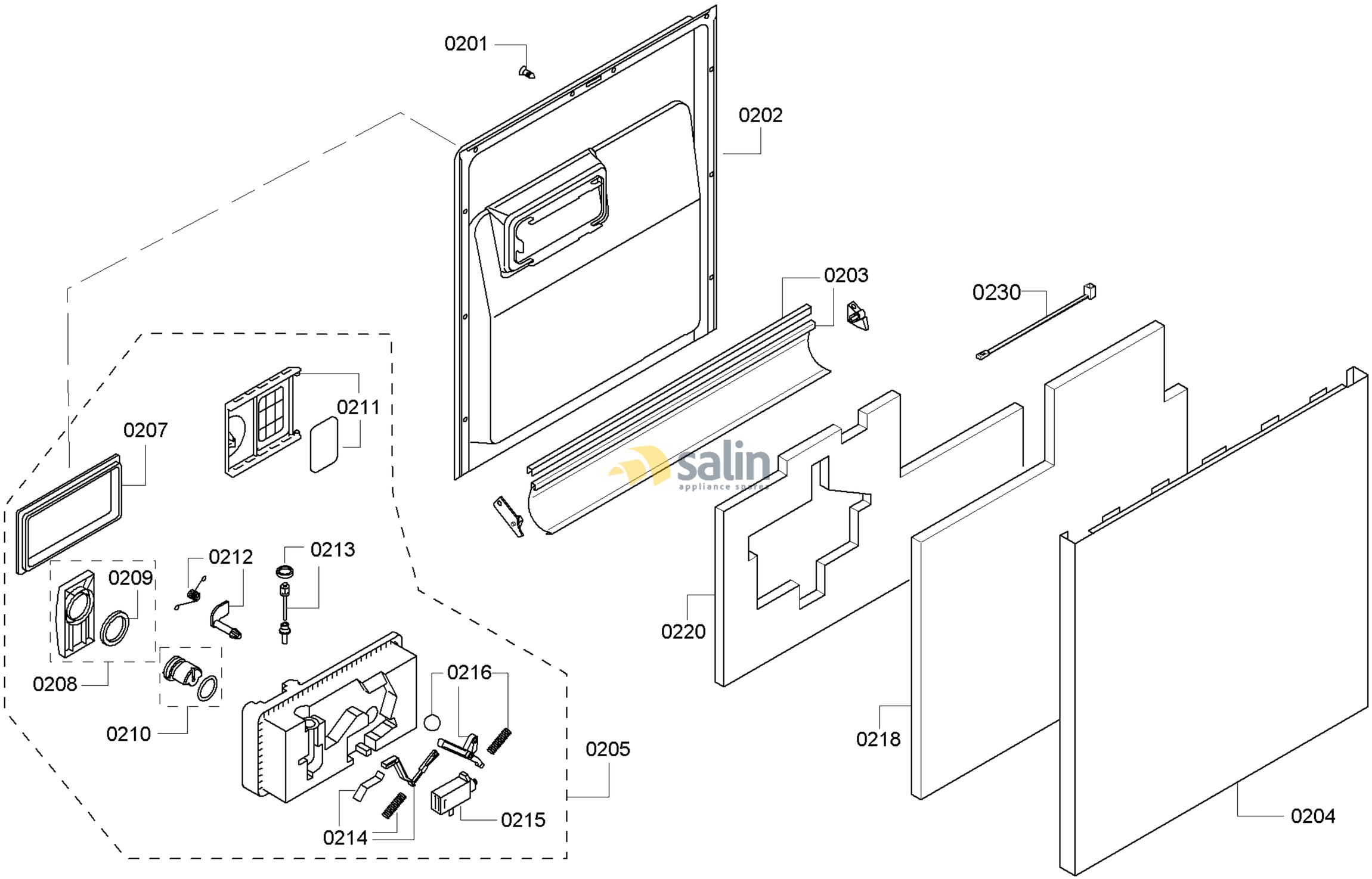

58300000153960 aet 000 a 2/6

FAMILY : SHE55C05UC
MODEL NO: SHE55C05UC/65
Check Position No/Part No or Replacement No

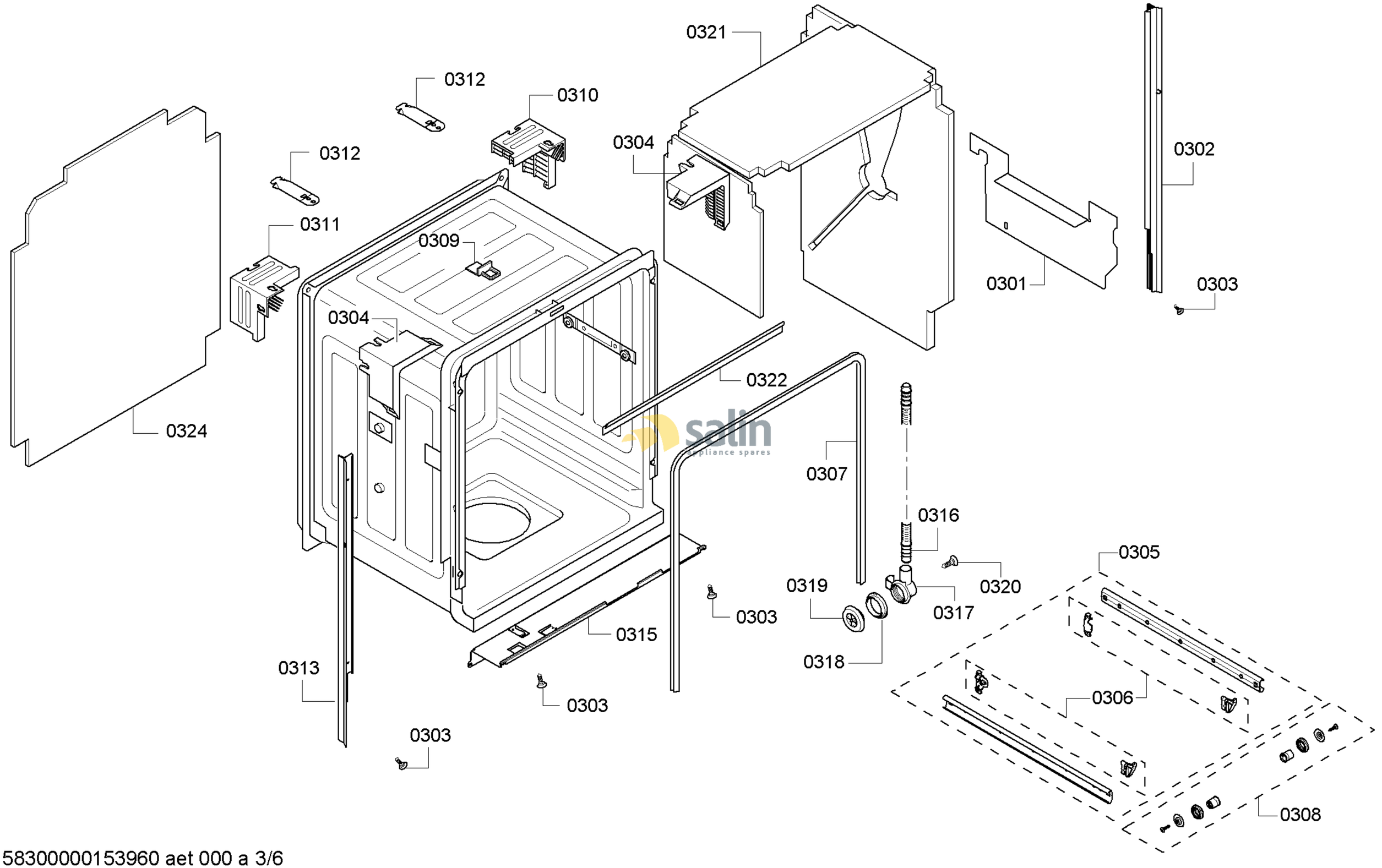

58300000153960 aet 000 a 3/6

FAMILY : SHE55C05UC
MODEL NO: SHE55C05UC/65
Check Position No/Part No or Replacement No

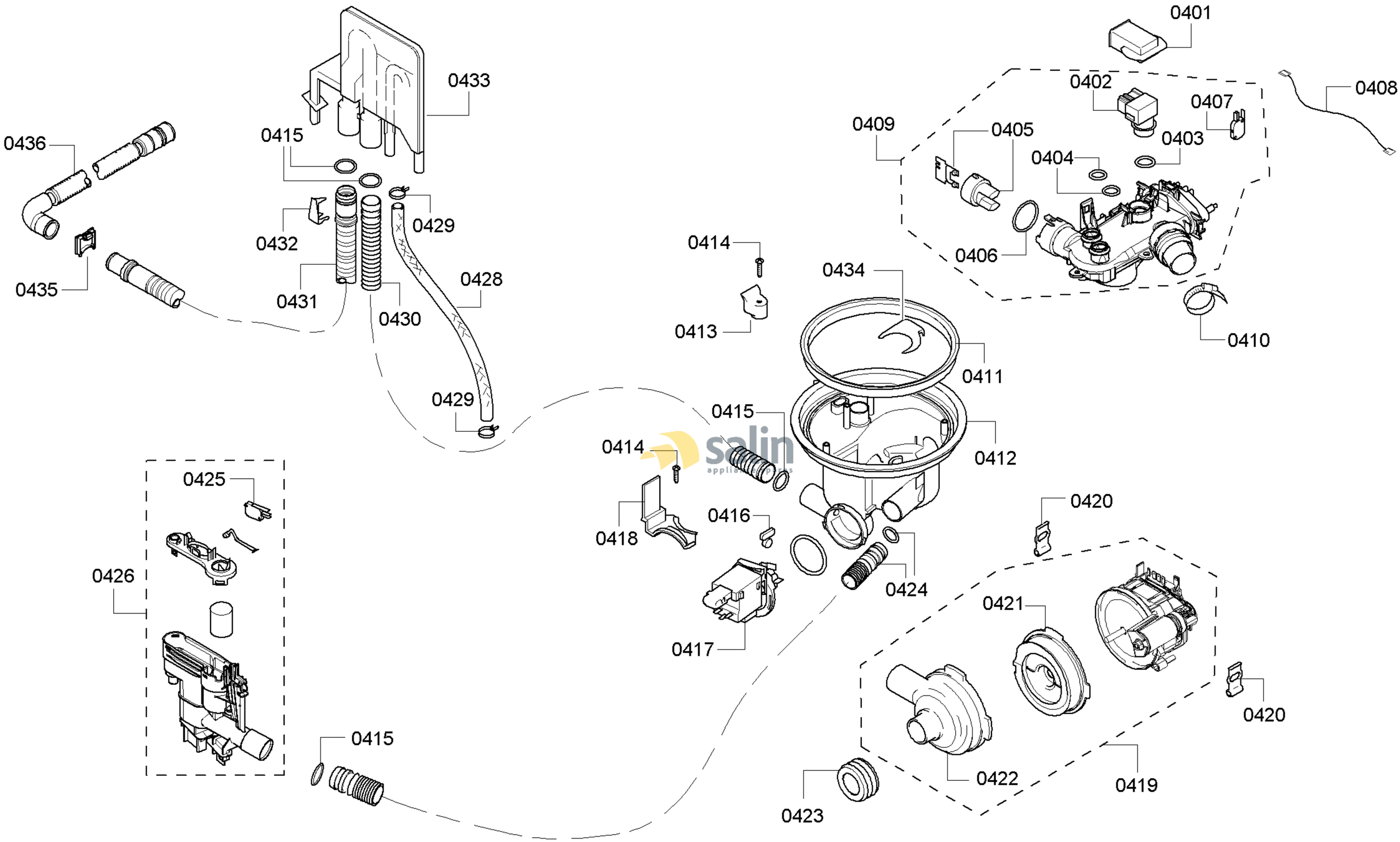

58300000153960 aet 000 a 4/6

FAMILY : SHE55C05UC
MODEL NO: SHE55C05UC/65
Check Position No/Part No or Replacement No

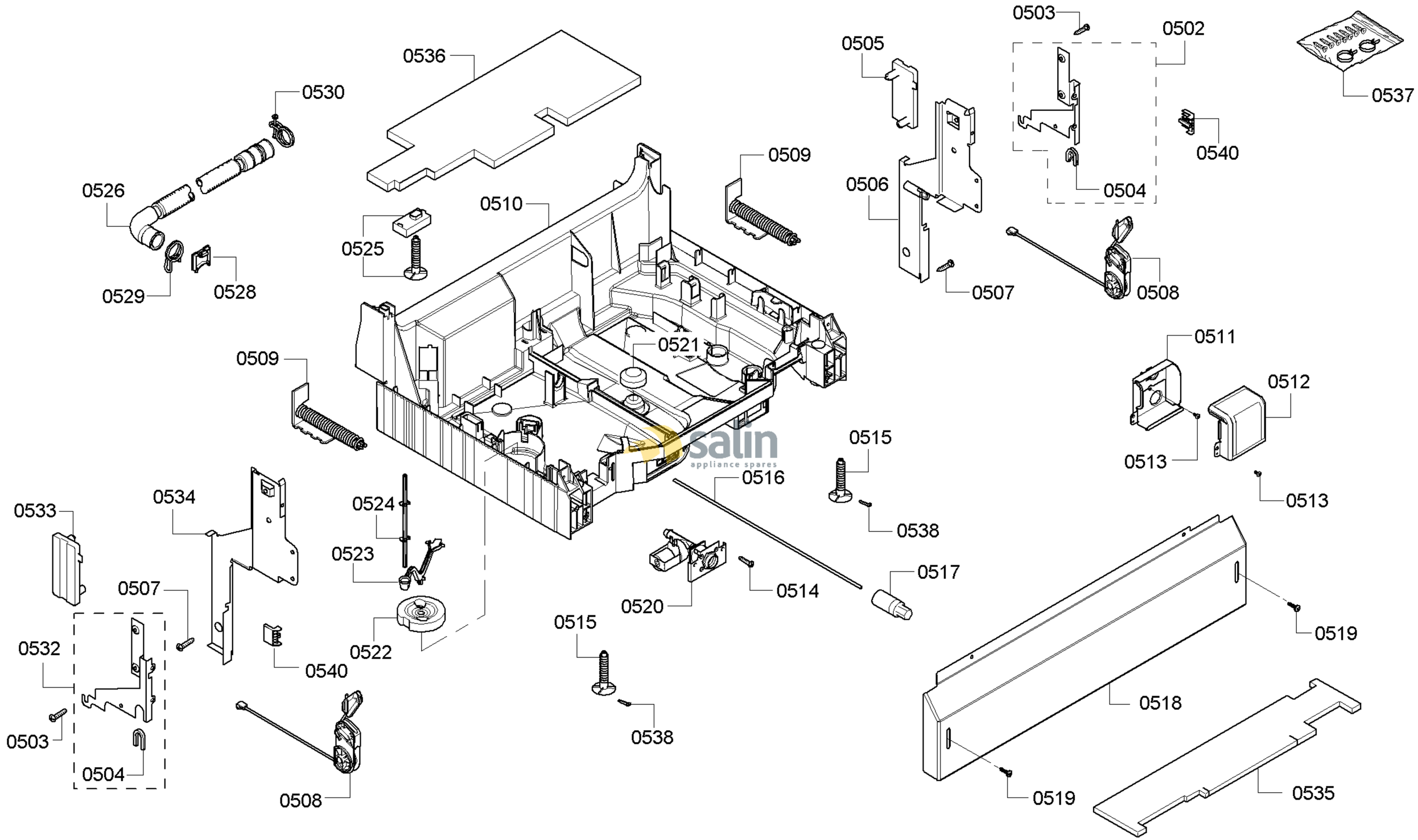

58300000153960 aet 000 a 5/6

FAMILY : SHE55C05UC
MODEL NO: SHE55C05UC/65
Check Position No/Part No or Replacement No

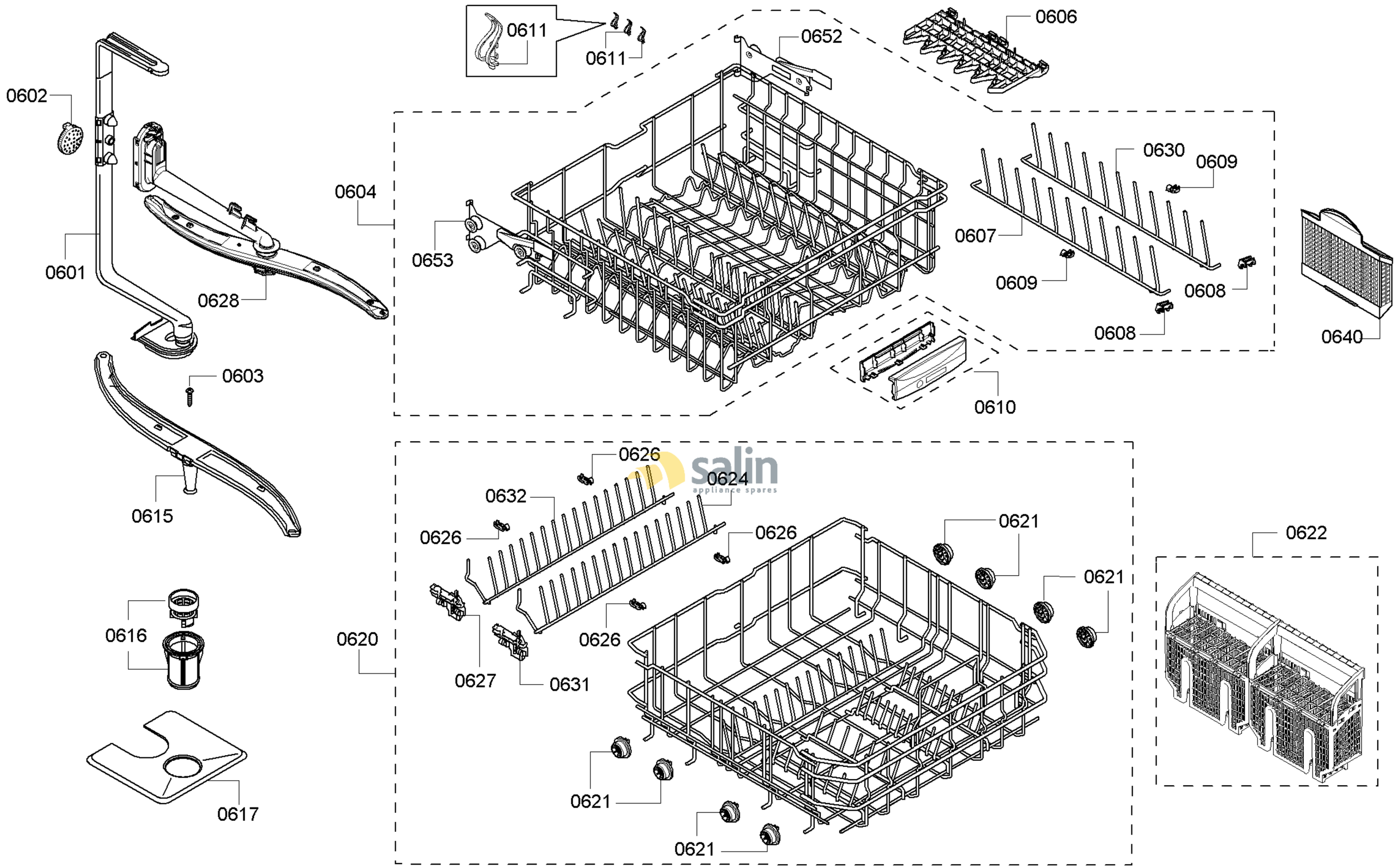

58300000153960 aet 000 a 6/6

FAMILY : SHE55C05UC
MODEL NO: SHE55C05UC/65
Check Position No/Part No or Replacement No