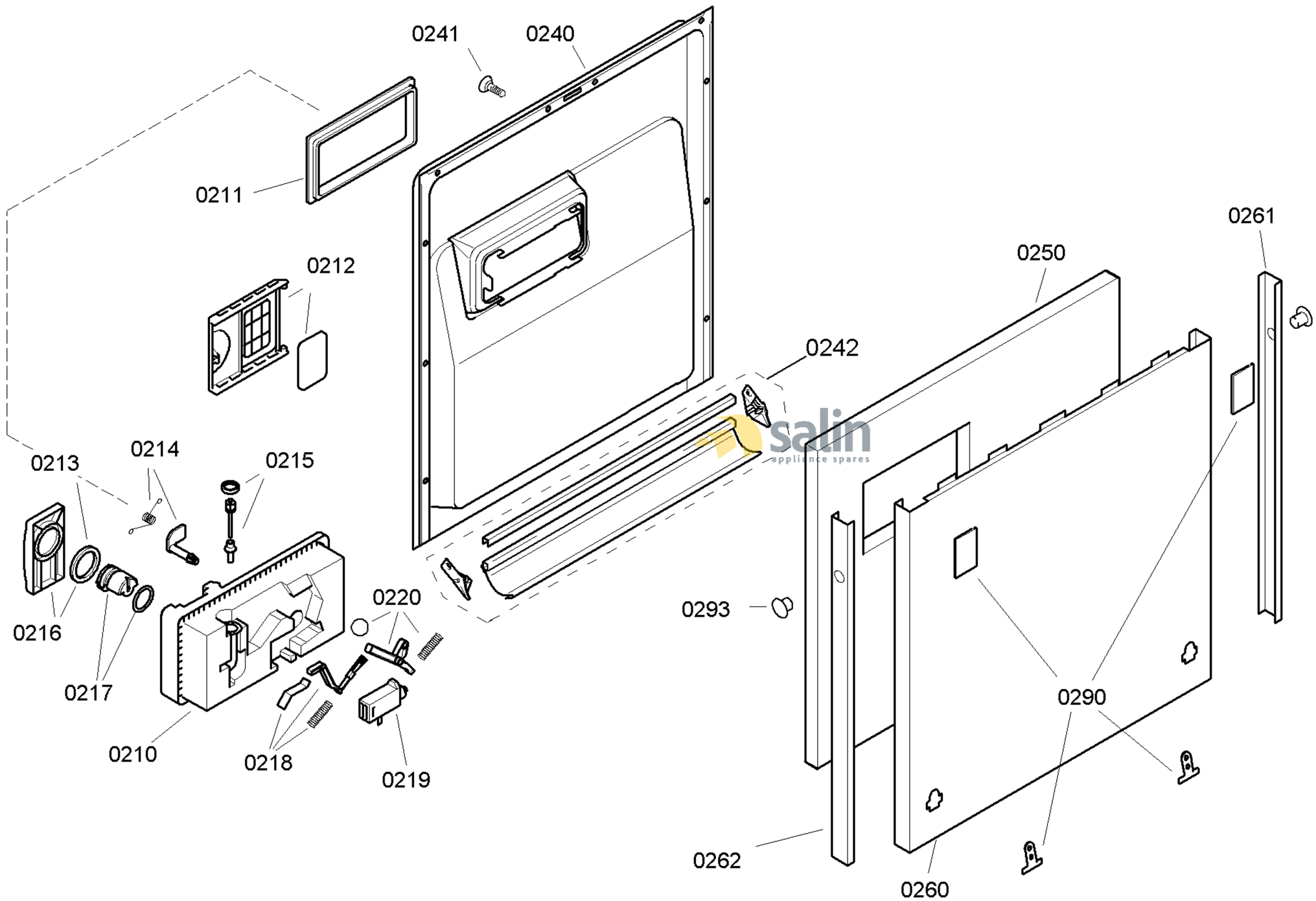

58300000114134 aet 000 b 2/6

FAMILY : SGI57M15CZ
MODEL NO: SGI57M15CZ/37
Check Position No/Part No or Replacement No

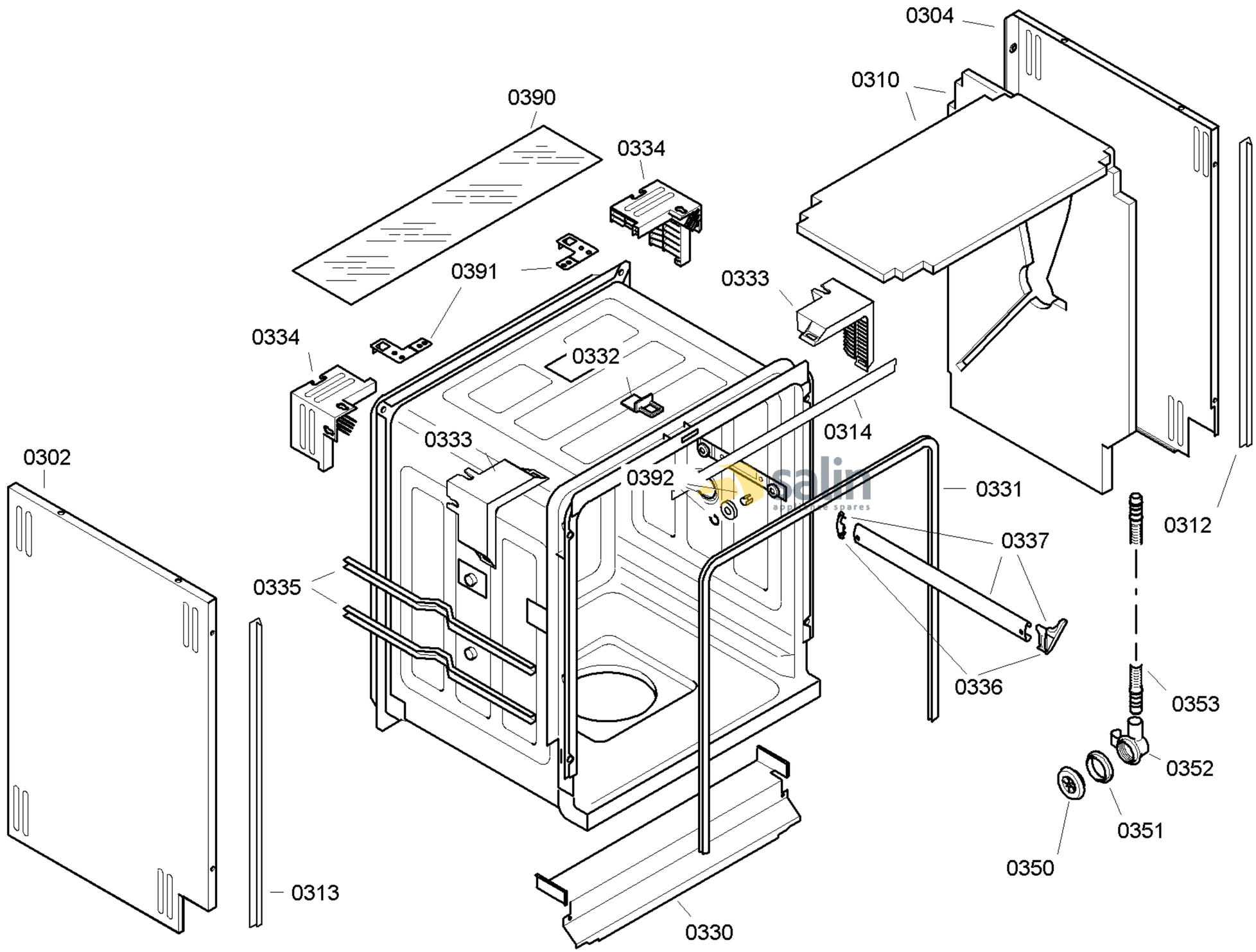

58300000114134 aet 000 b 3/6

FAMILY : SGI57M15CZ
MODEL NO: SGI57M15CZ/37
Check Position No/Part No or Replacement No

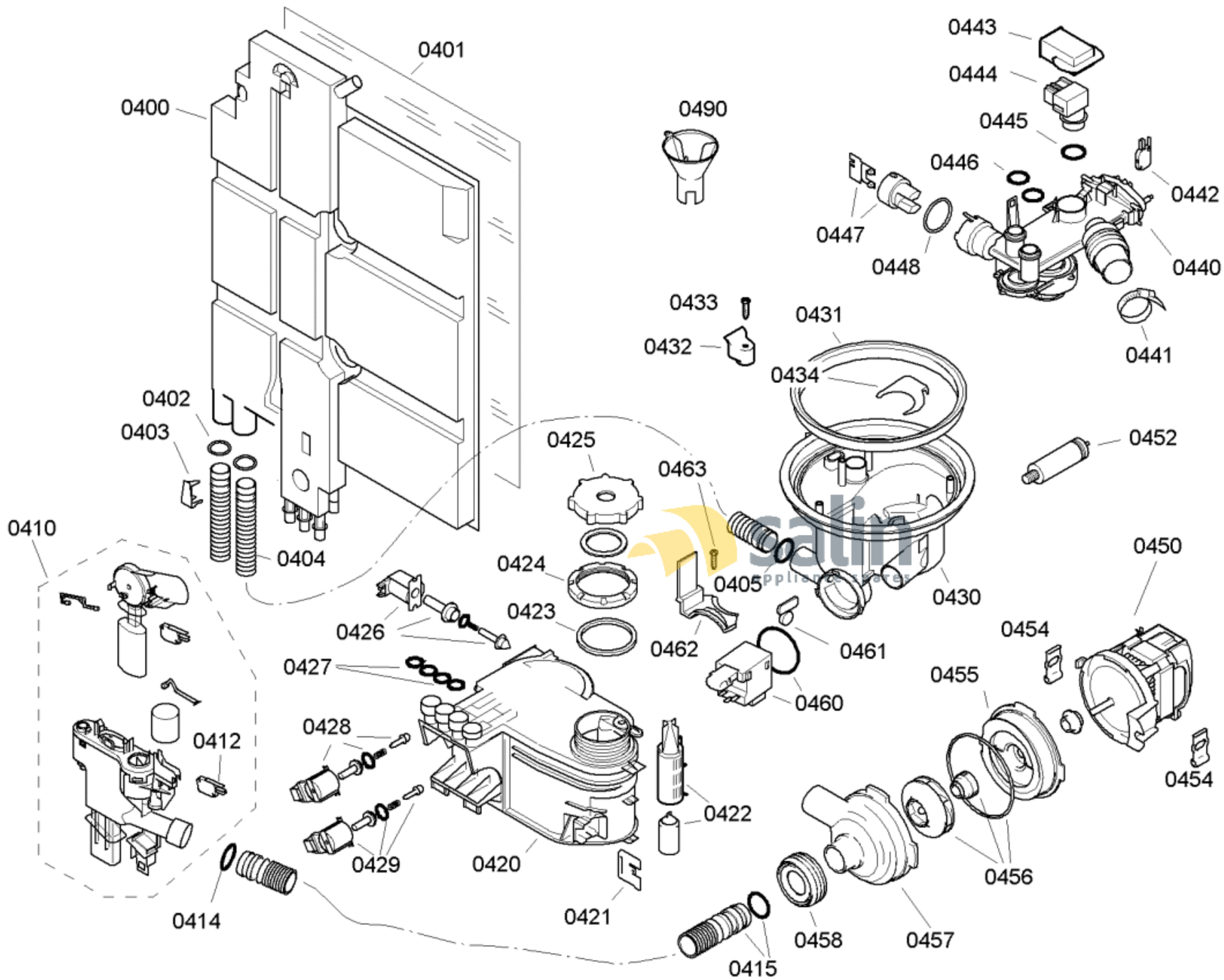

58300000114134 aet 000 b 4/6

FAMILY : SGI57M15CZ

MODEL NO: SGI57M15CZ/37

Check Position No/Part No or Replacement No

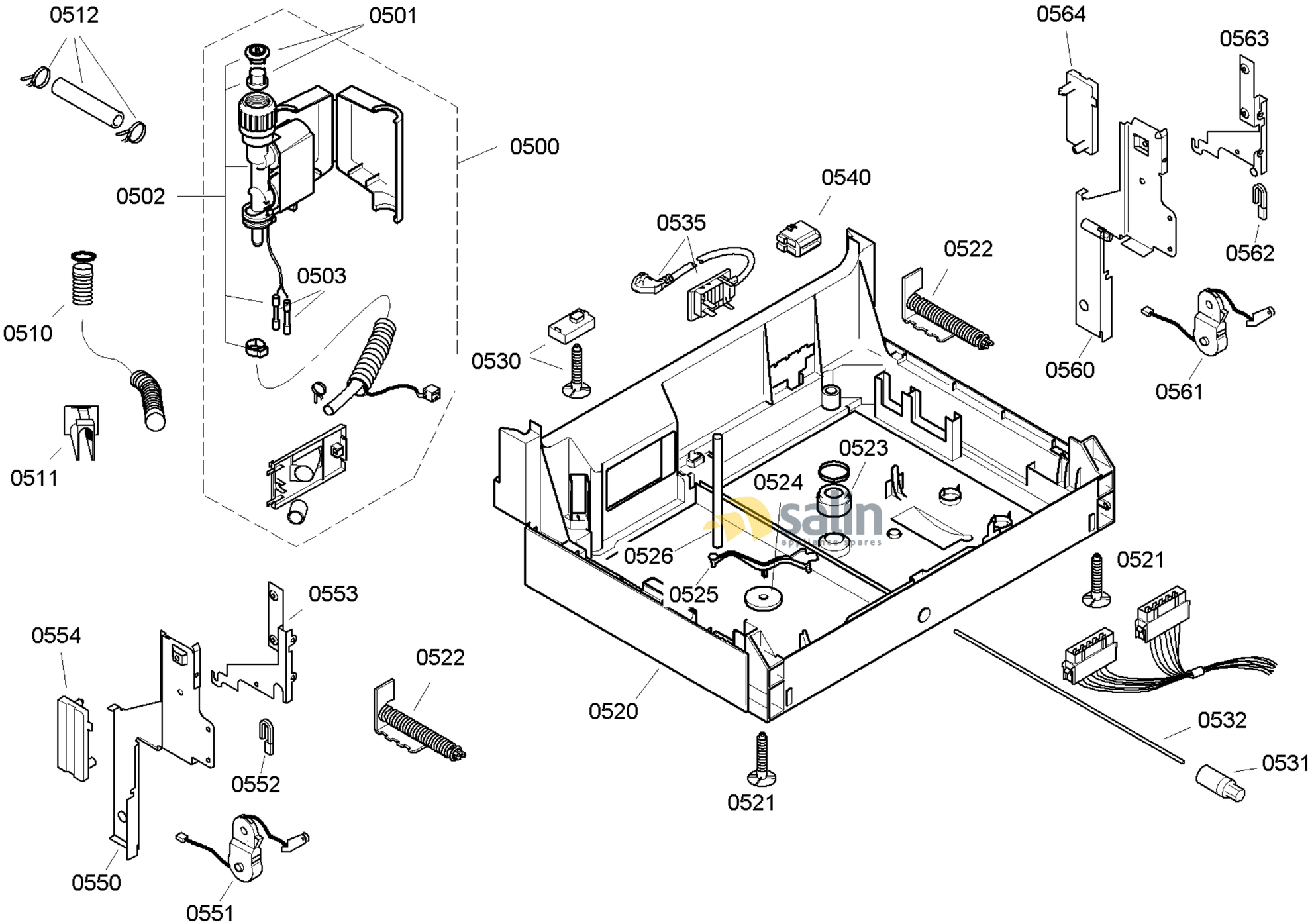

58300000114134 aet 000 b 5/6

FAMILY : SGI57M15CZ
MODEL NO: SGI57M15CZ/37
Check Position No/Part No or Replacement No

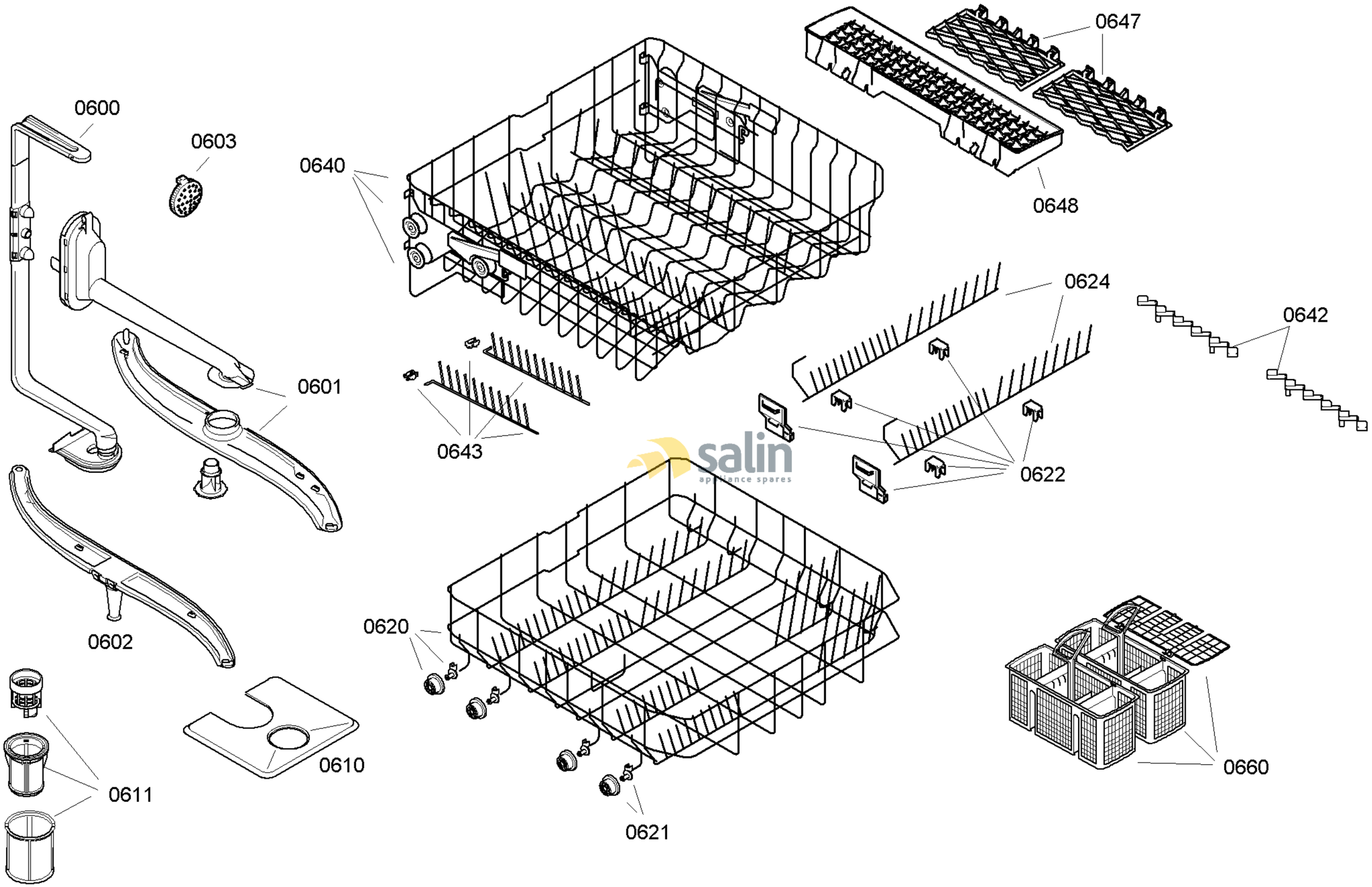

58300000114134 aet 000 b 6/6

FAMILY : SGI57M15CZ
MODEL NO: SGI57M15CZ/37
Check Position No/Part No or Replacement No