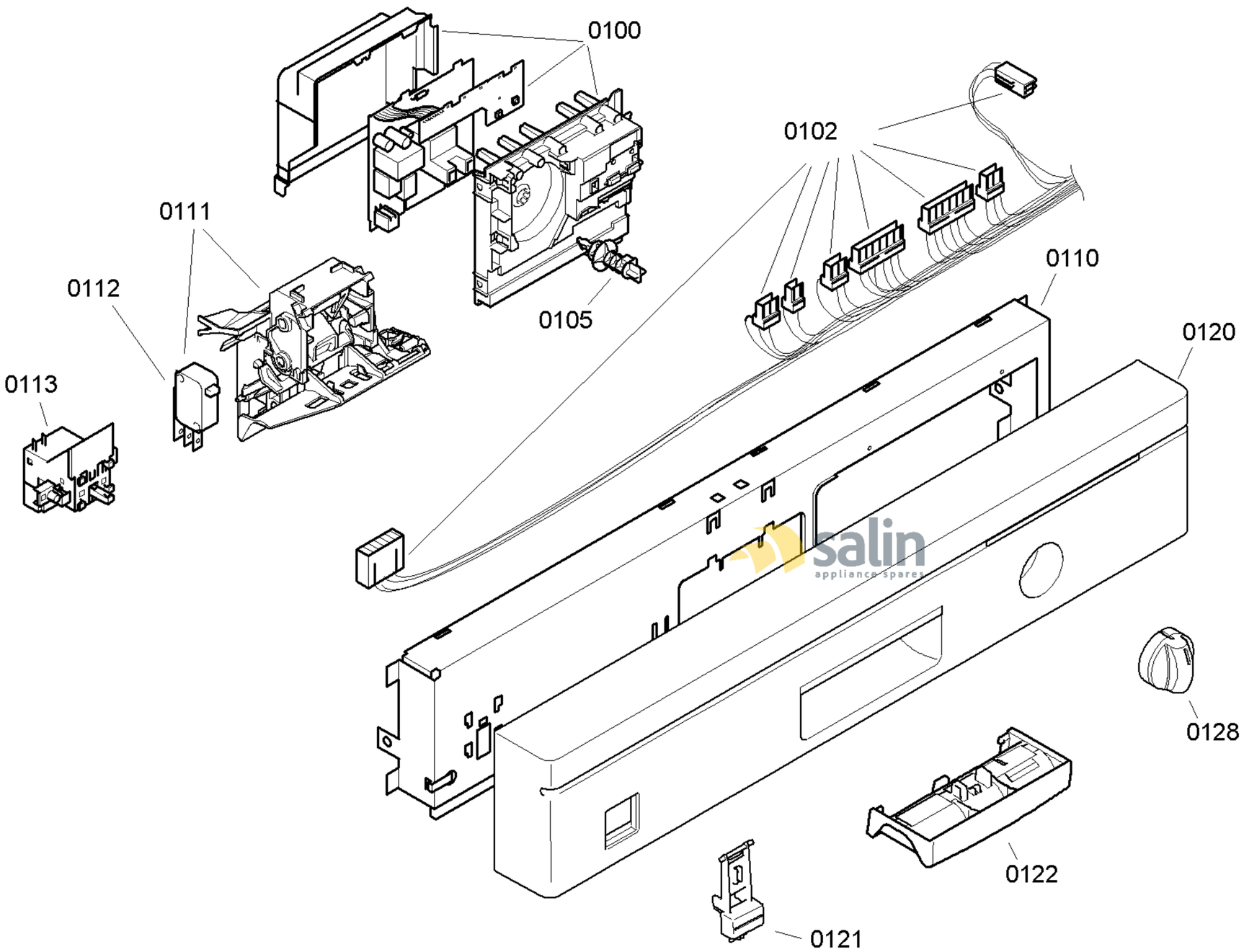

58300000116707 aet 000 e 1/6

FAMILY : SGU43E62SK
MODEL NO: SGU43E62SK/23
Check Position No/Part No or Replacement No

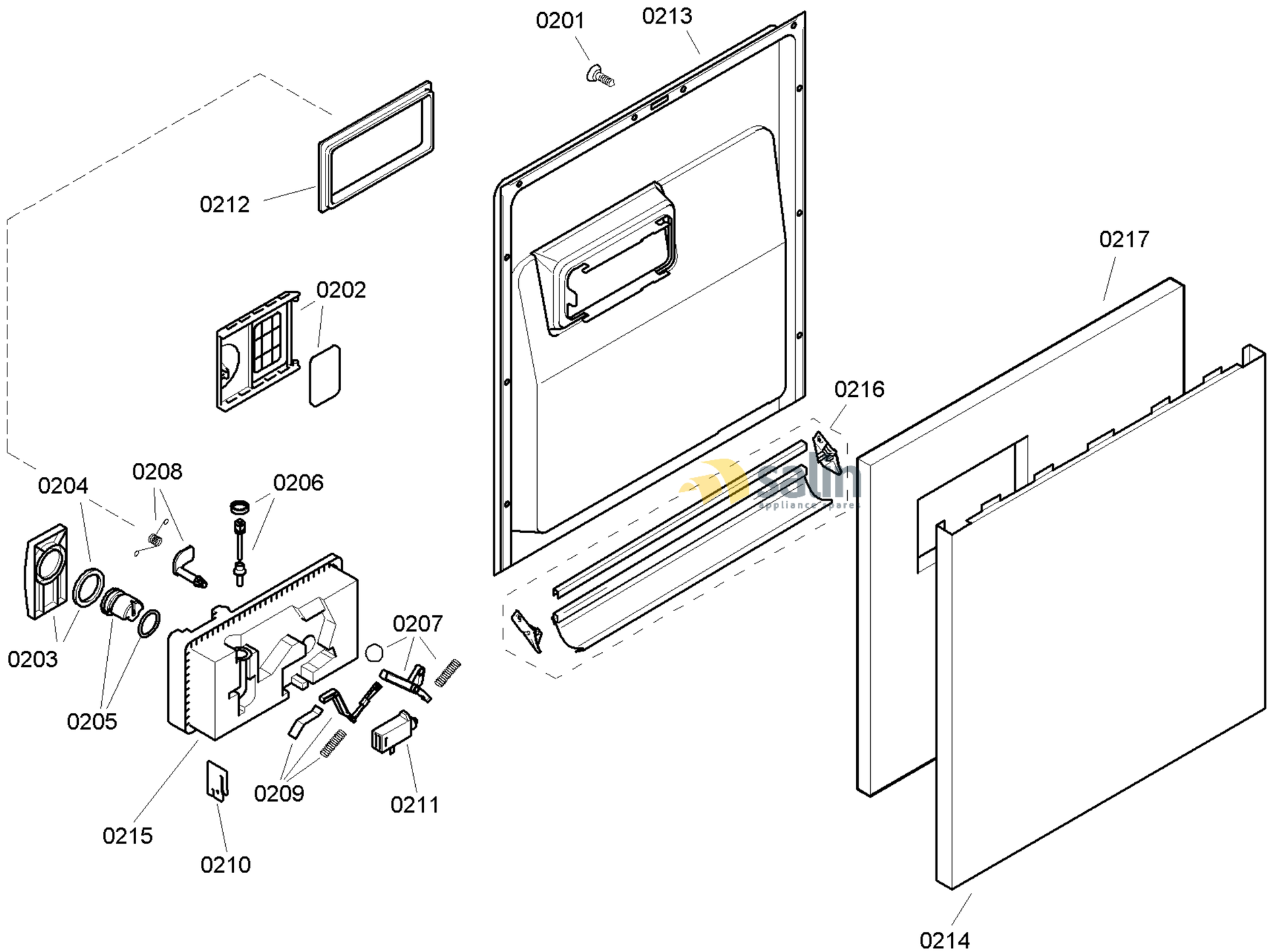

58300000116707 aet 000 e 2/6

FAMILY : SGU43E62SK
MODEL NO: SGU43E62SK/23
Check Position No/Part No or Replacement No

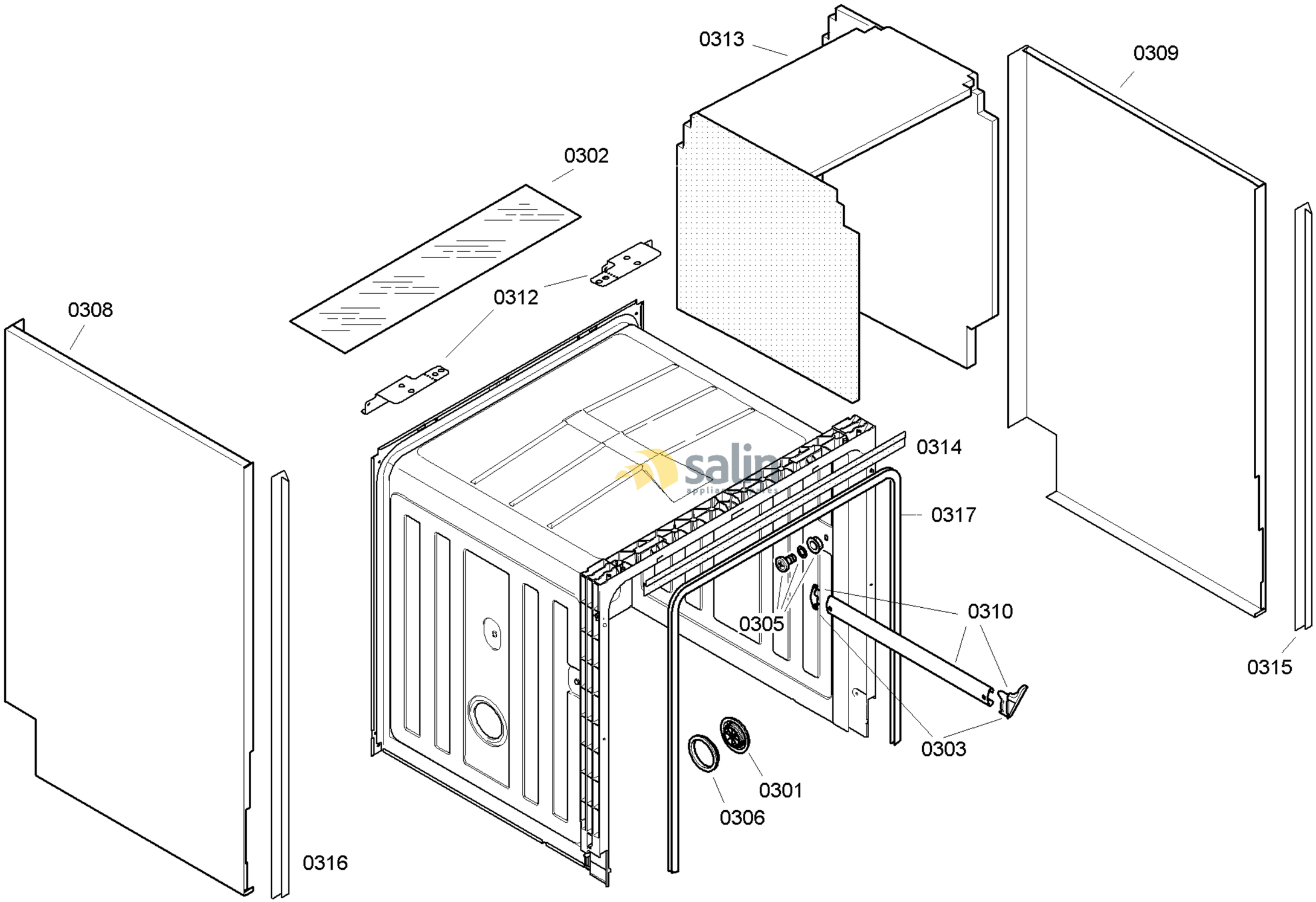

58300000116707 aet 000 e 3/6

FAMILY : SGU43E62SK
MODEL NO: SGU43E62SK/23
Check Position No/Part No or Replacement No

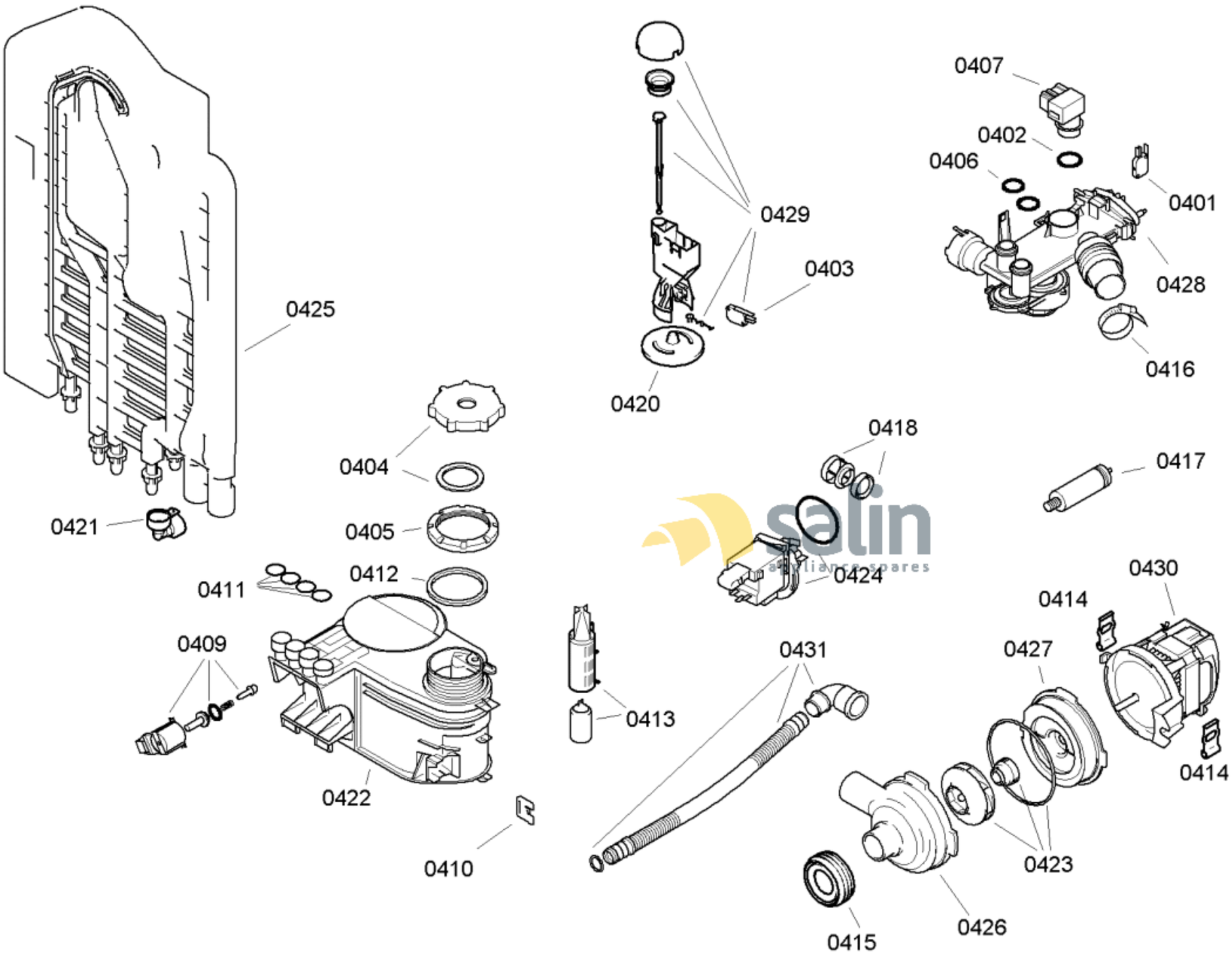

58300000116707 aet 000 e 4/6

FAMILY : SGU43E62SK

MODEL NO: SGU43E62SK/23

Check Position No/Part No or Replacement No

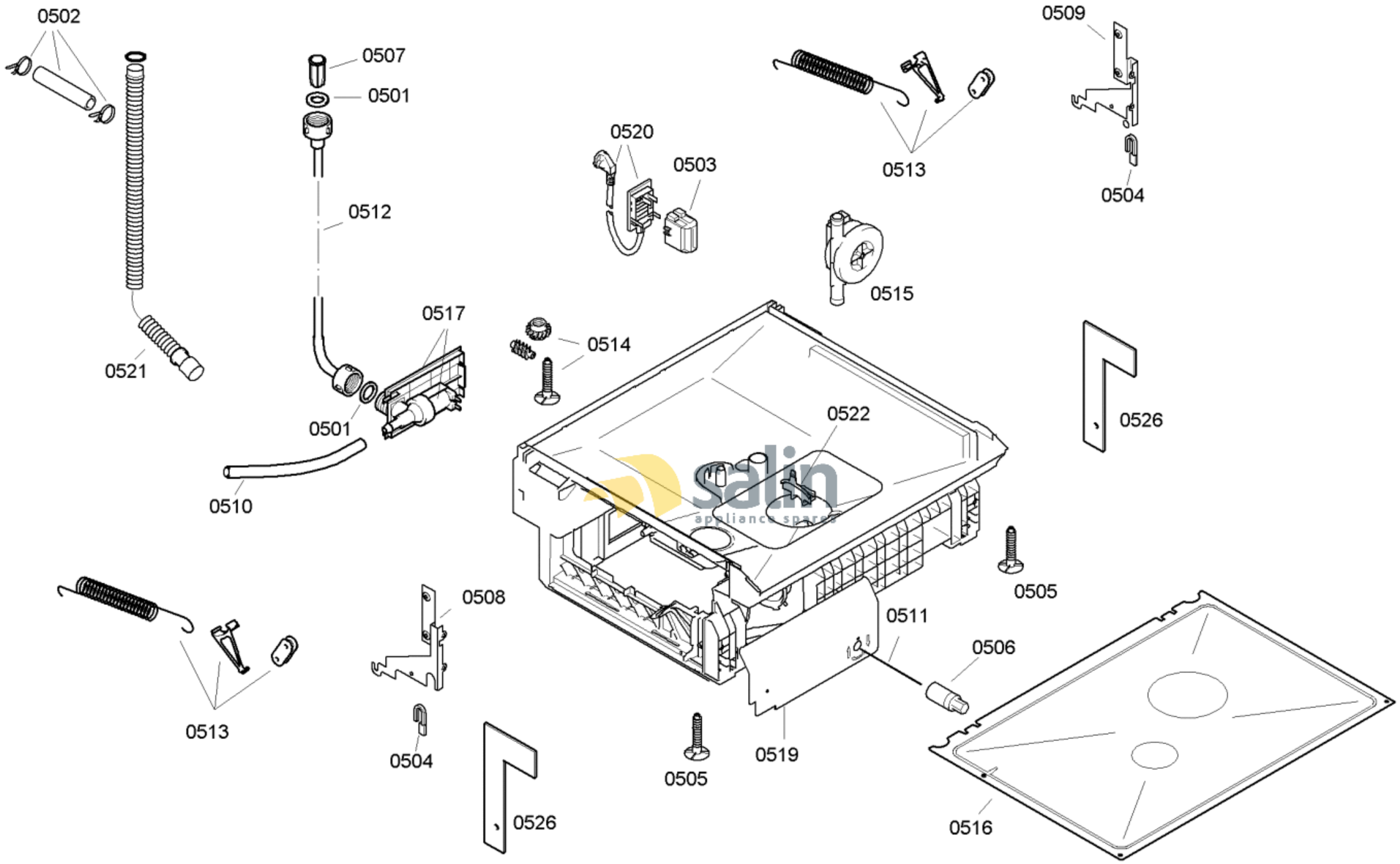

58300000116707 aet 000 e 5/6

FAMILY : SGU43E62SK

MODEL NO: SGU43E62SK/23

Check Position No/Part No or Replacement No

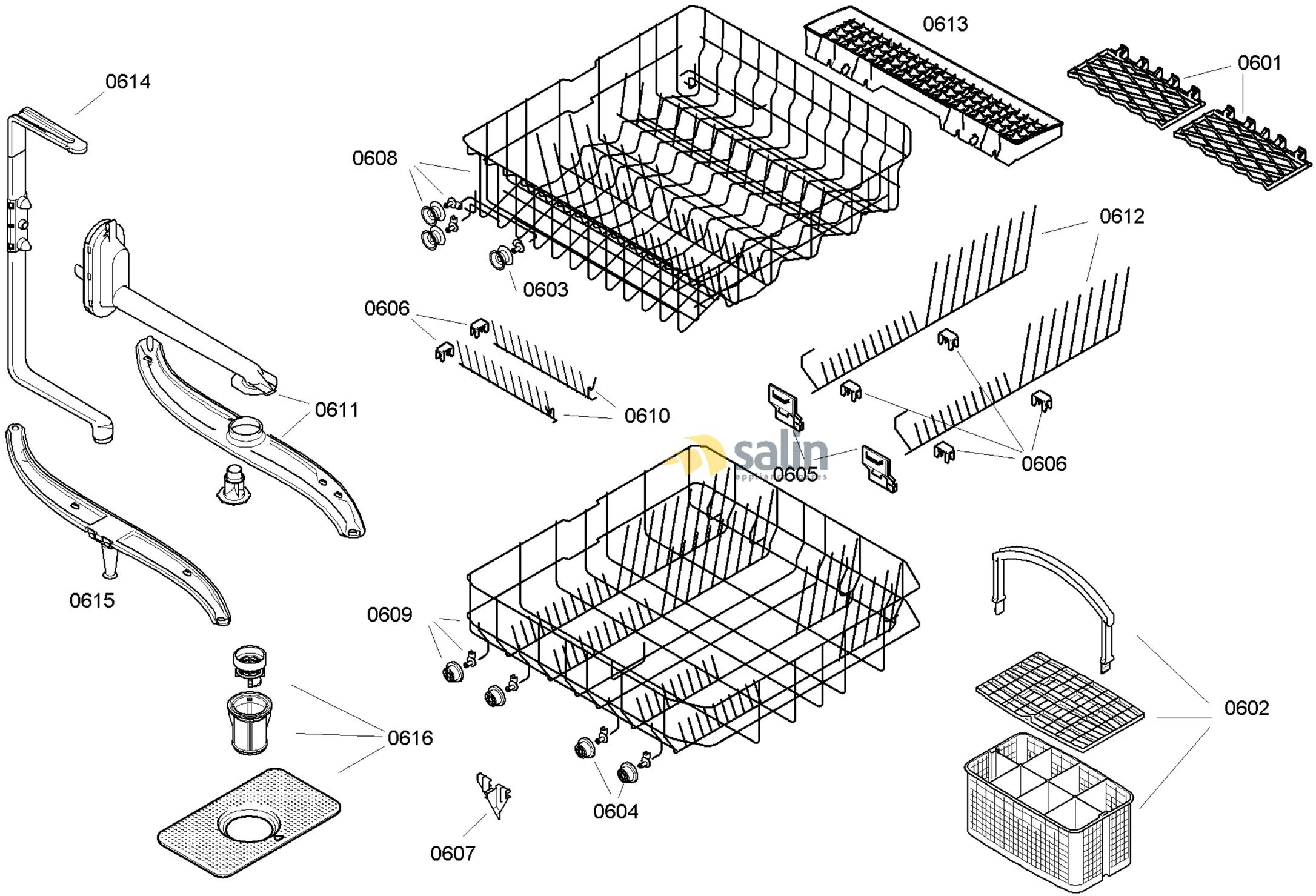

58300000116707 aet 000 e 6/6

FAMILY : SGU43E62SK
MODEL NO: SGU43E62SK/23
Check Position No/Part No or Replacement No