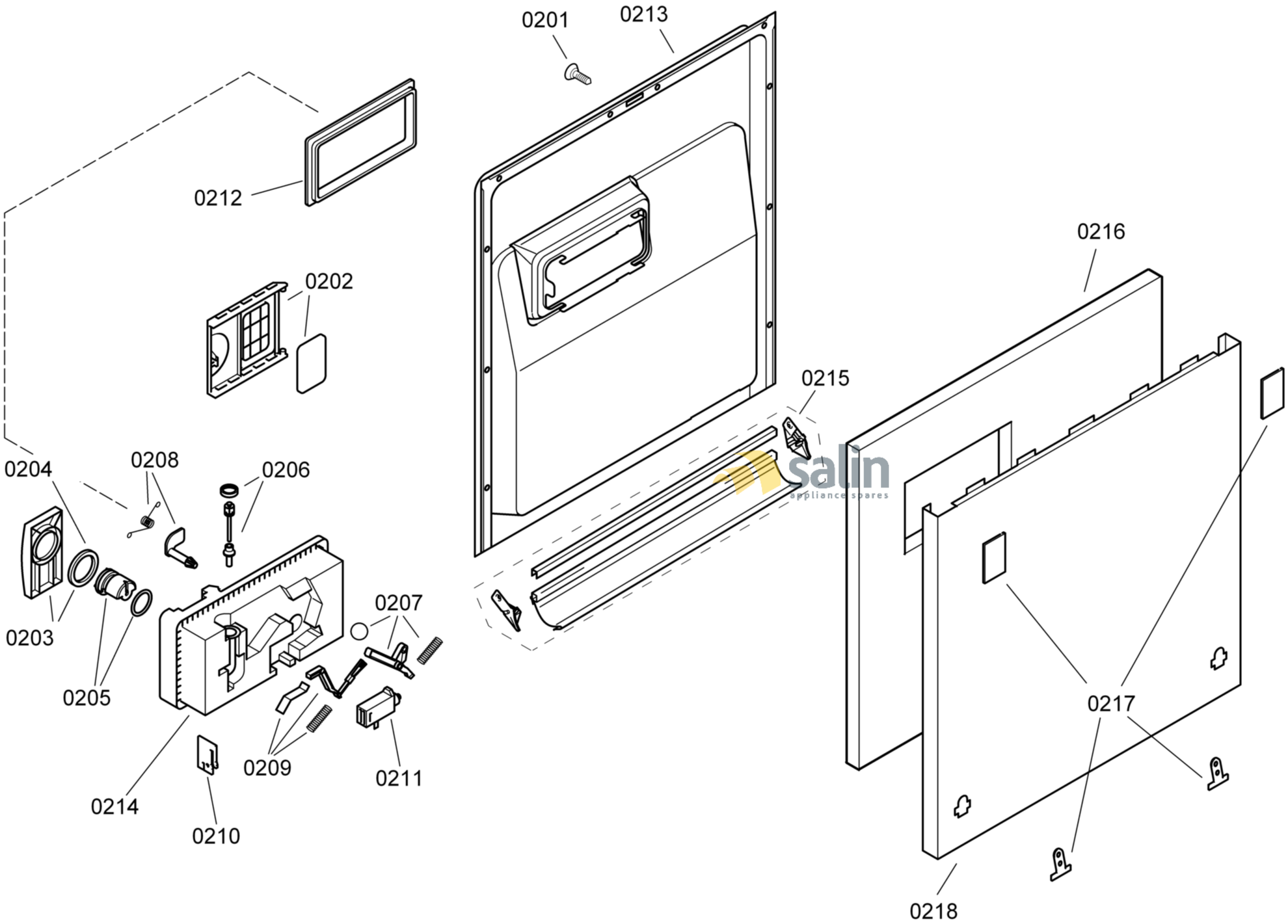

58300000135055 aet 000 c 2/6

FAMILY : SGV43E43EU
MODEL NO: SGV43E43EU/33
Check Position No/Part No or Replacement No

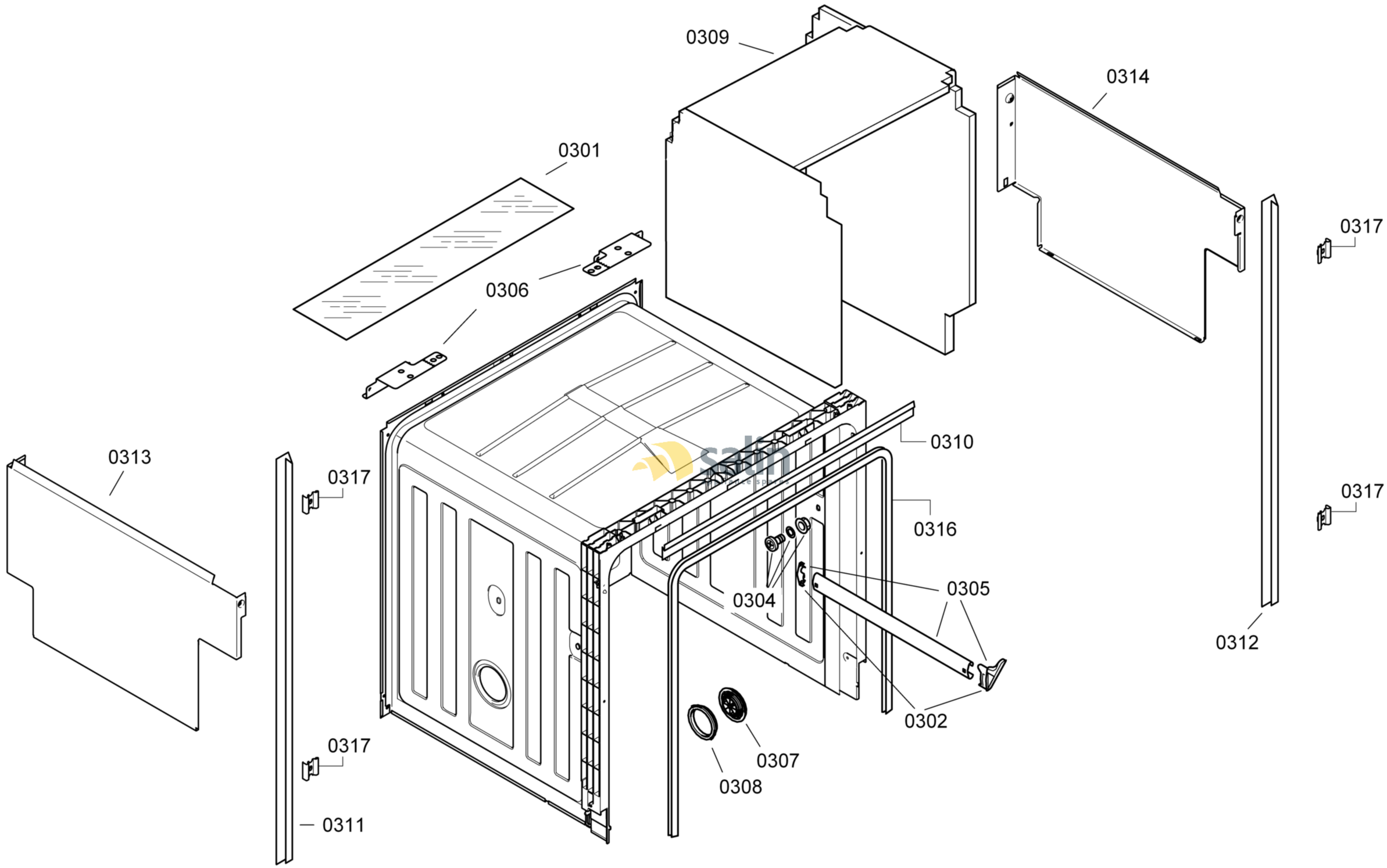

58300000135055 aet 000 c 3/6

FAMILY : SGV43E43EU
MODEL NO: SGV43E43EU/33
Check Position No/Part No or Replacement No

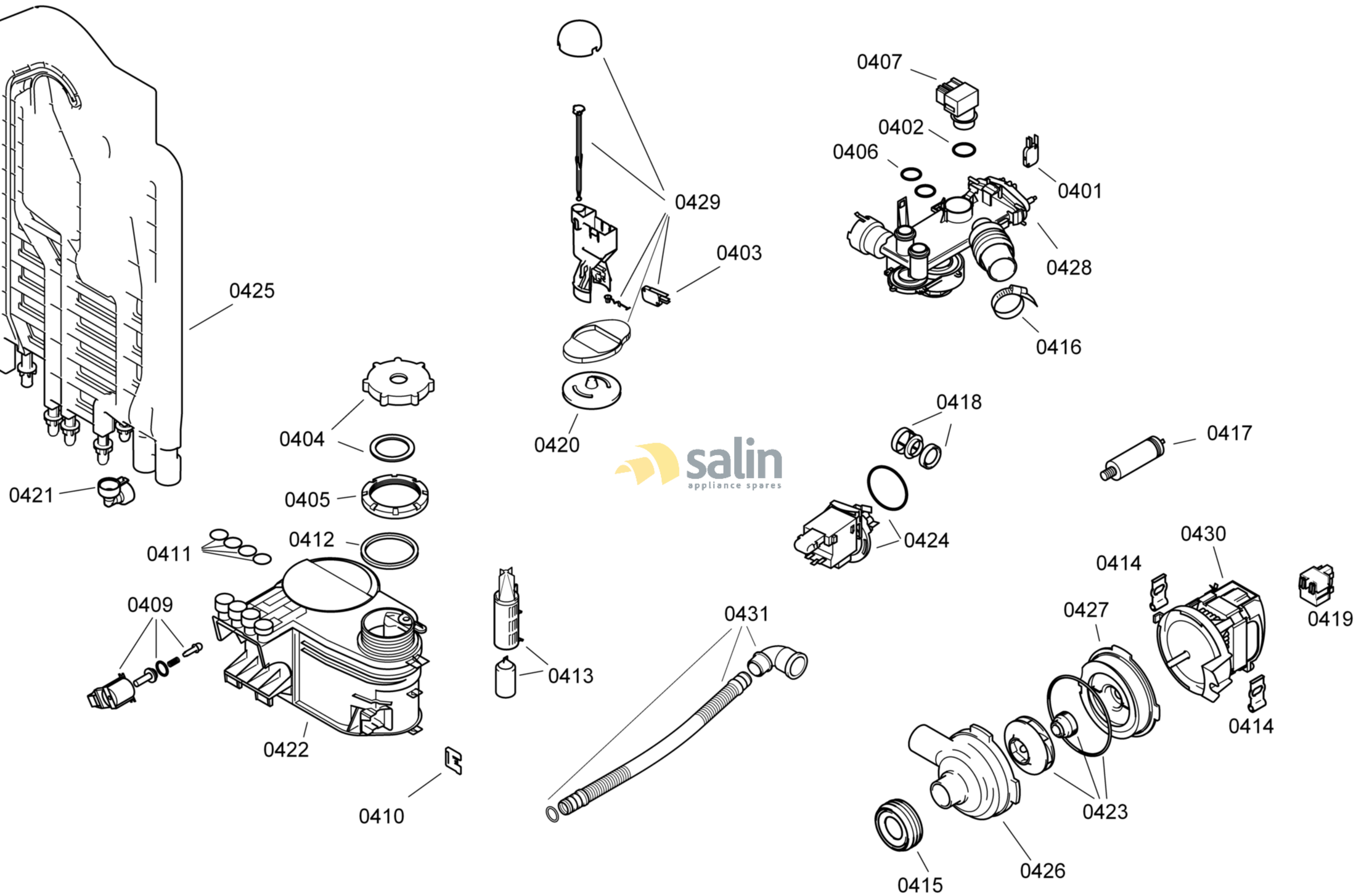

58300000135055 aet 000 c 4/6

FAMILY : SGV43E43EU
MODEL NO: SGV43E43EU/33
Check Position No/Part No or Replacement No

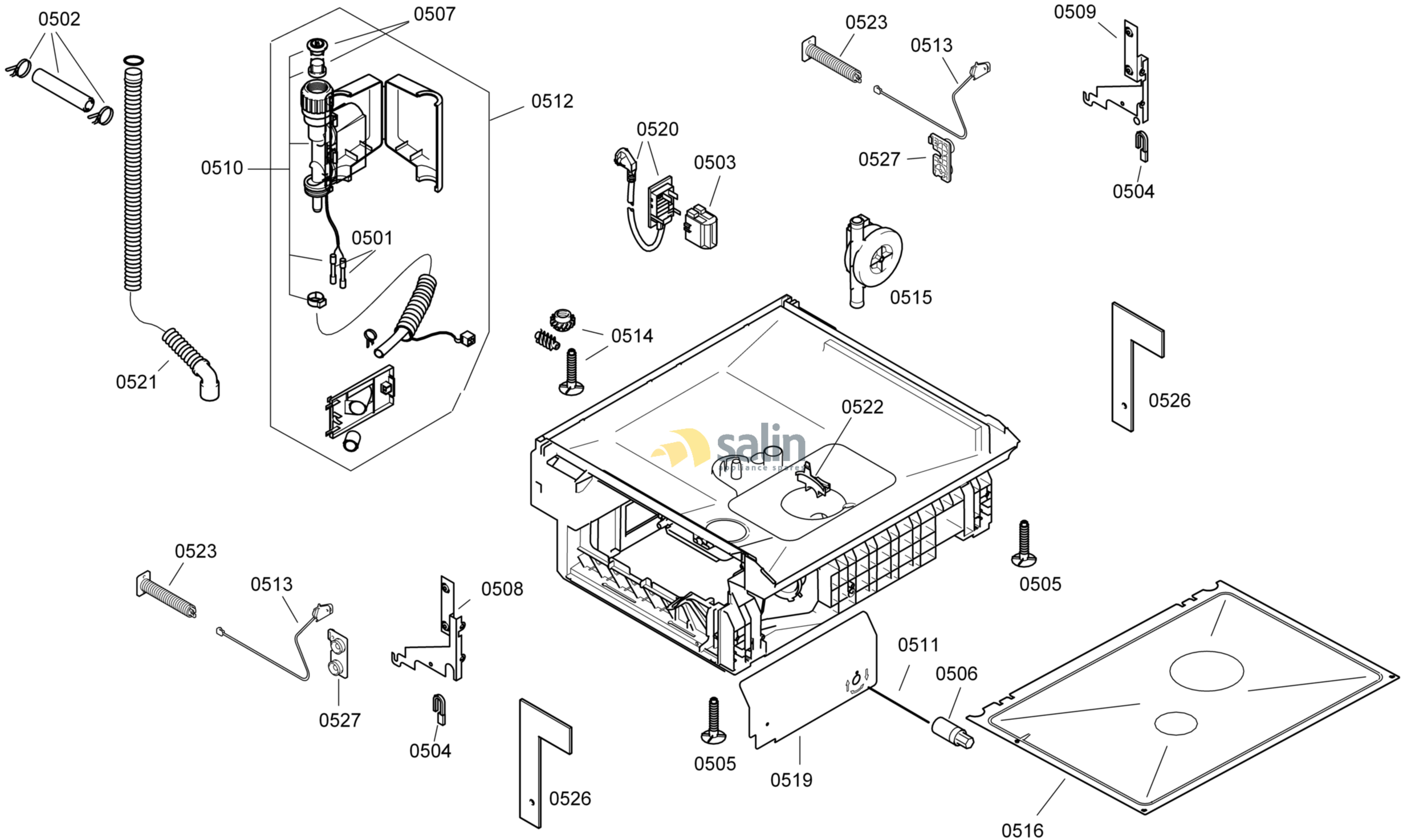

58300000135055 aet 000 c 5/6

FAMILY : SGV43E43EU
MODEL NO: SGV43E43EU/33
Check Position No/Part No or Replacement No

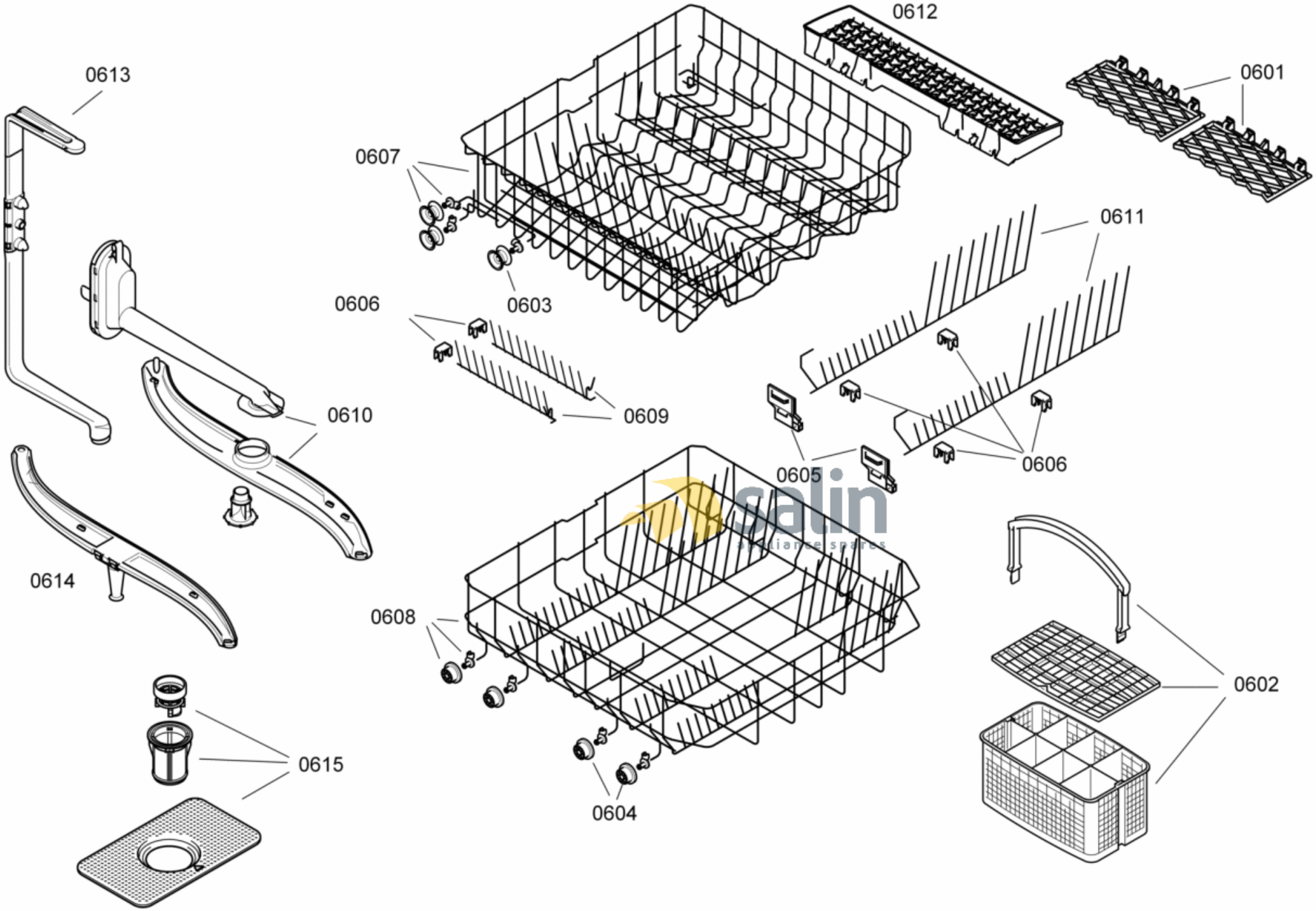

58300000135055 aet 000 c 6/6

FAMILY : SGV43E43EU

MODEL NO: SGV43E43EU/33

Check Position No/Part No or Replacement No