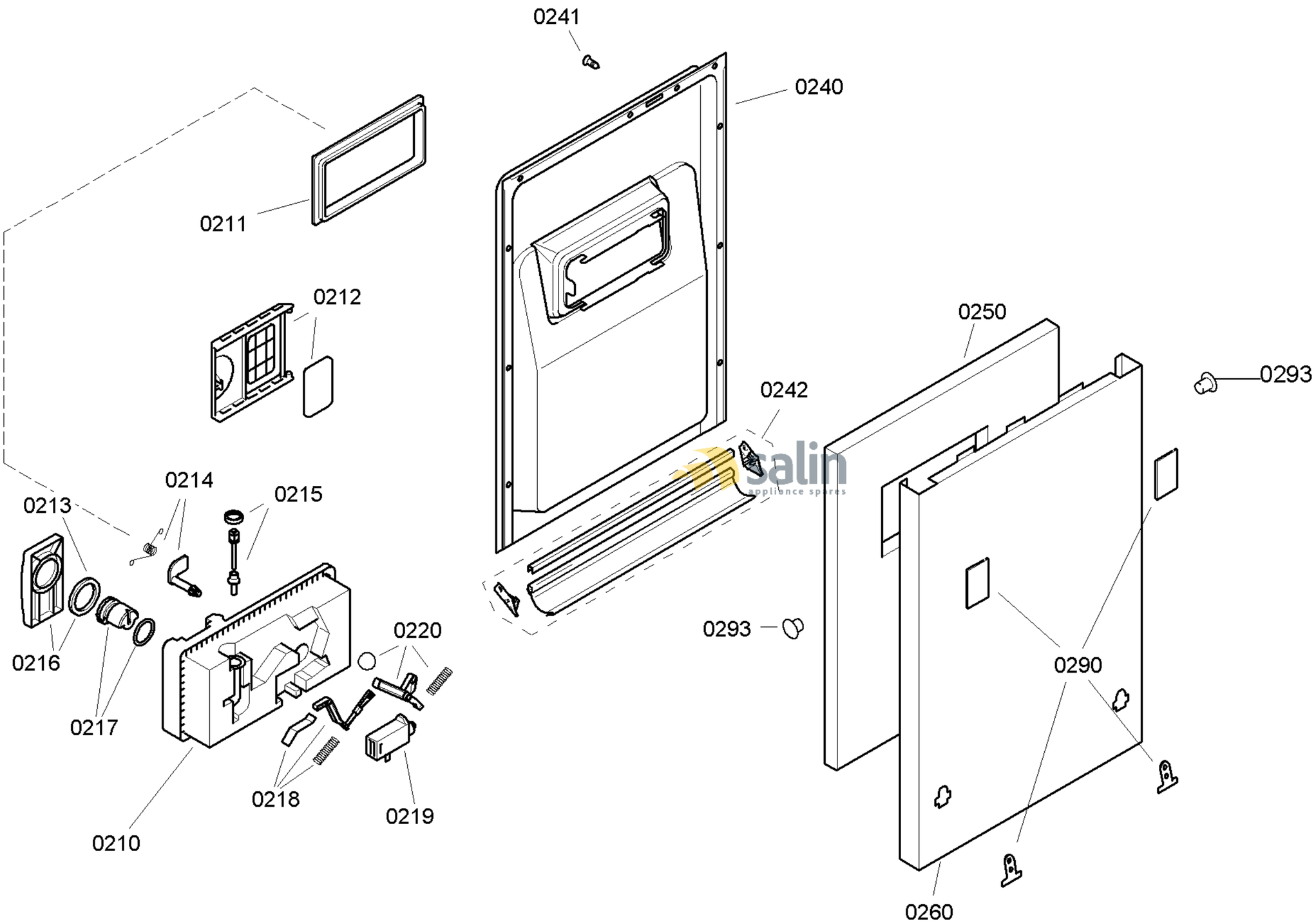

58300000116810 aet 000 d 2/6

FAMILY : SRI55T16EU
MODEL NO: SRI55T16EU/02
Check Position No/Part No or Replacement No

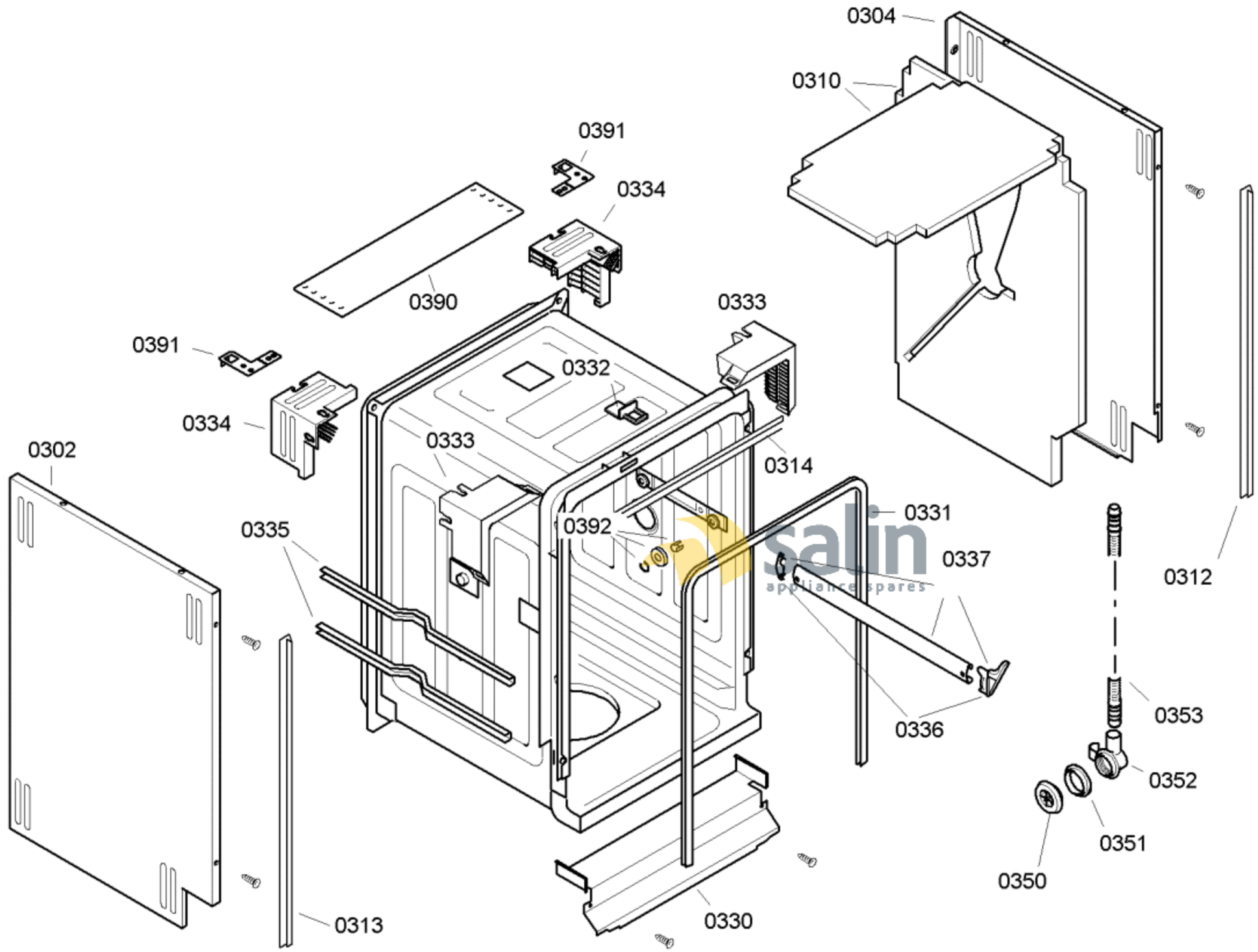

58300000116810 aet 000 d 3/6

FAMILY : SRI55T16EU

MODEL NO: SRI55T16EU/02

Check Position No/Part No or Replacement No

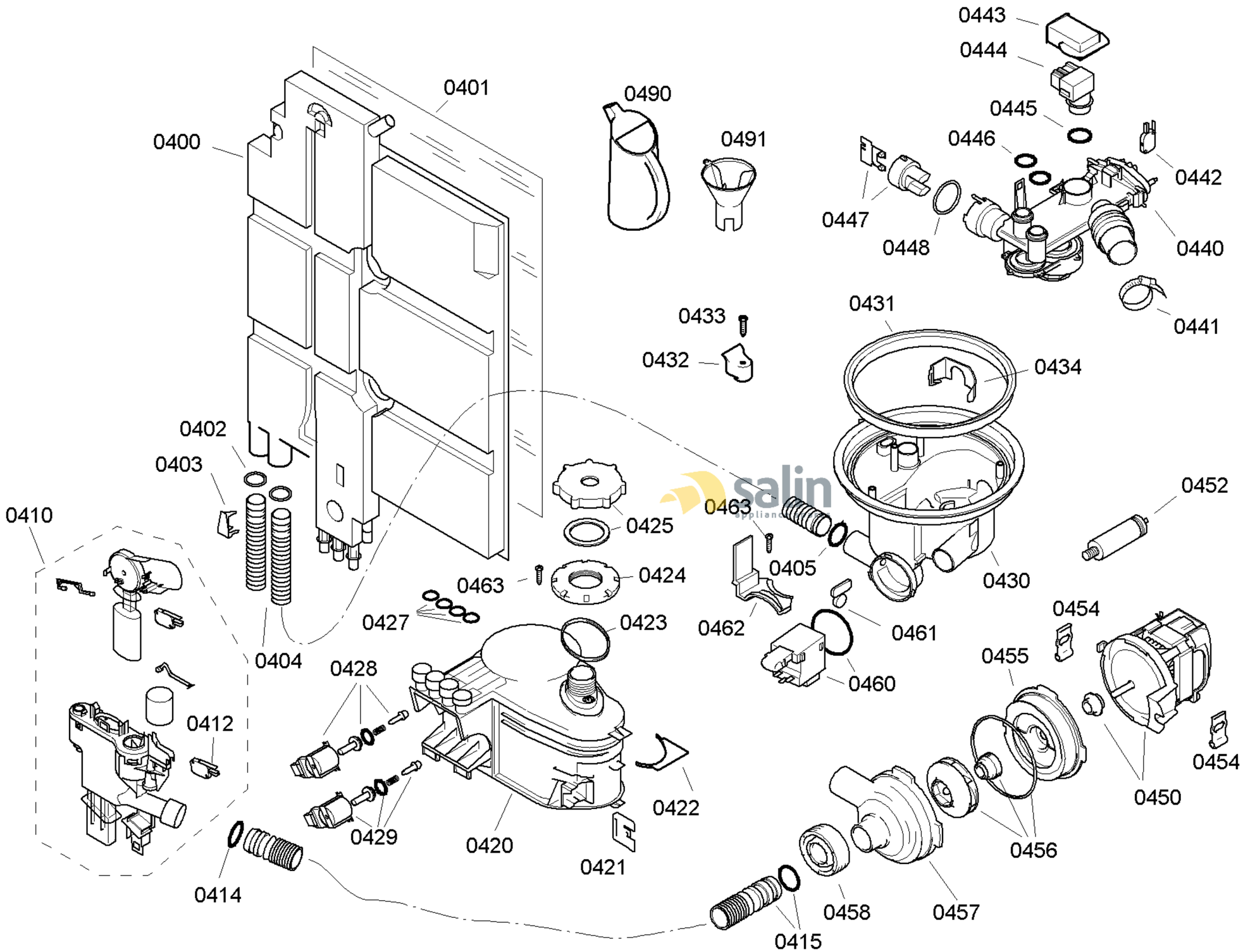

58300000116810 aet 000 d 4/6

FAMILY : SRI55T16EU
MODEL NO: SRI55T16EU/02
Check Position No/Part No or Replacement No

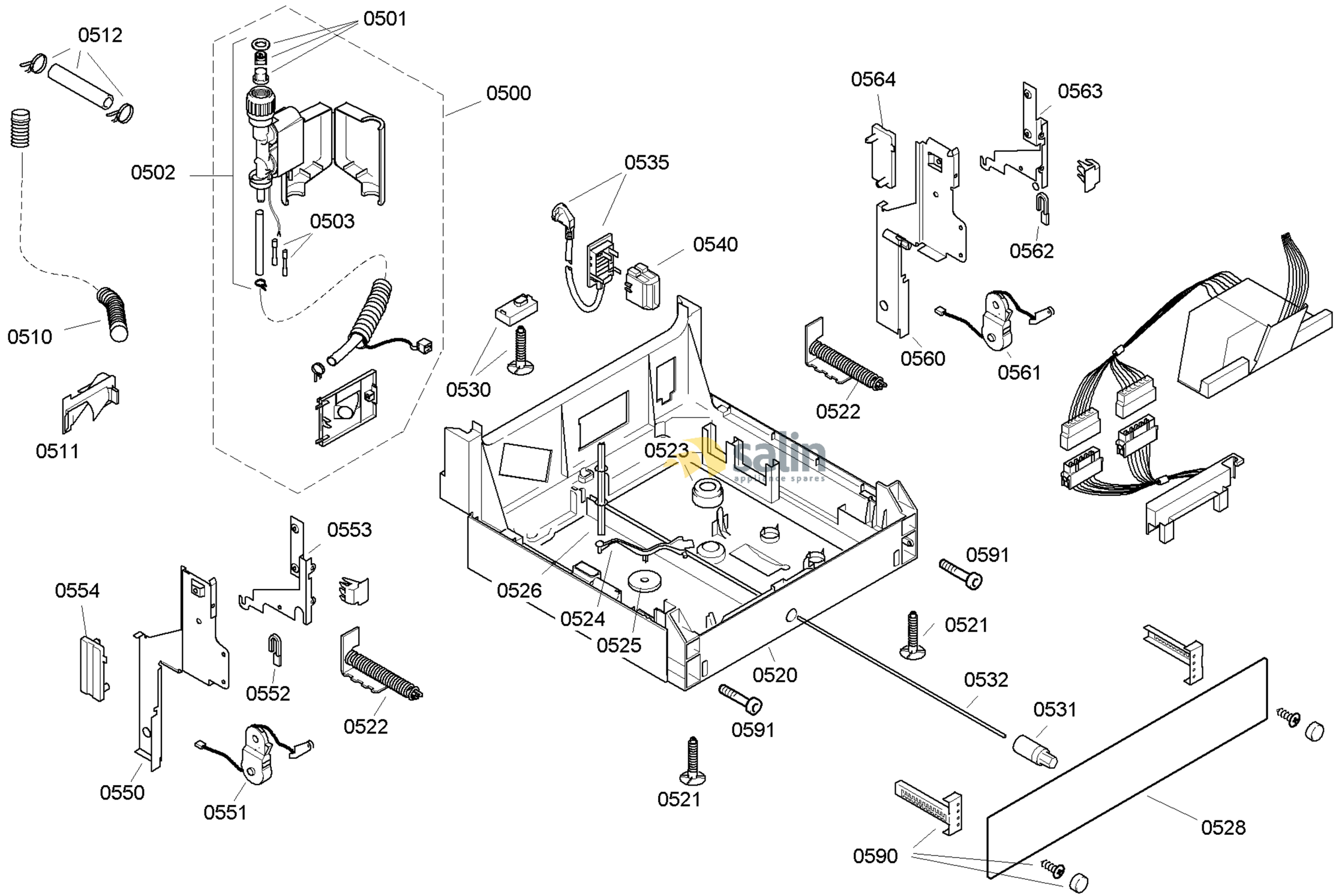

58300000116810 aet 000 d 5/6

FAMILY : SRI55T16EU
MODEL NO: SRI55T16EU/02
Check Position No/Part No or Replacement No

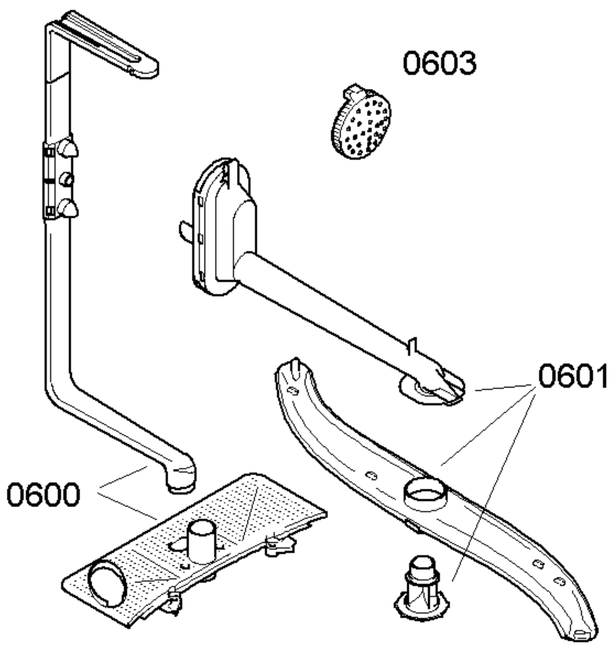

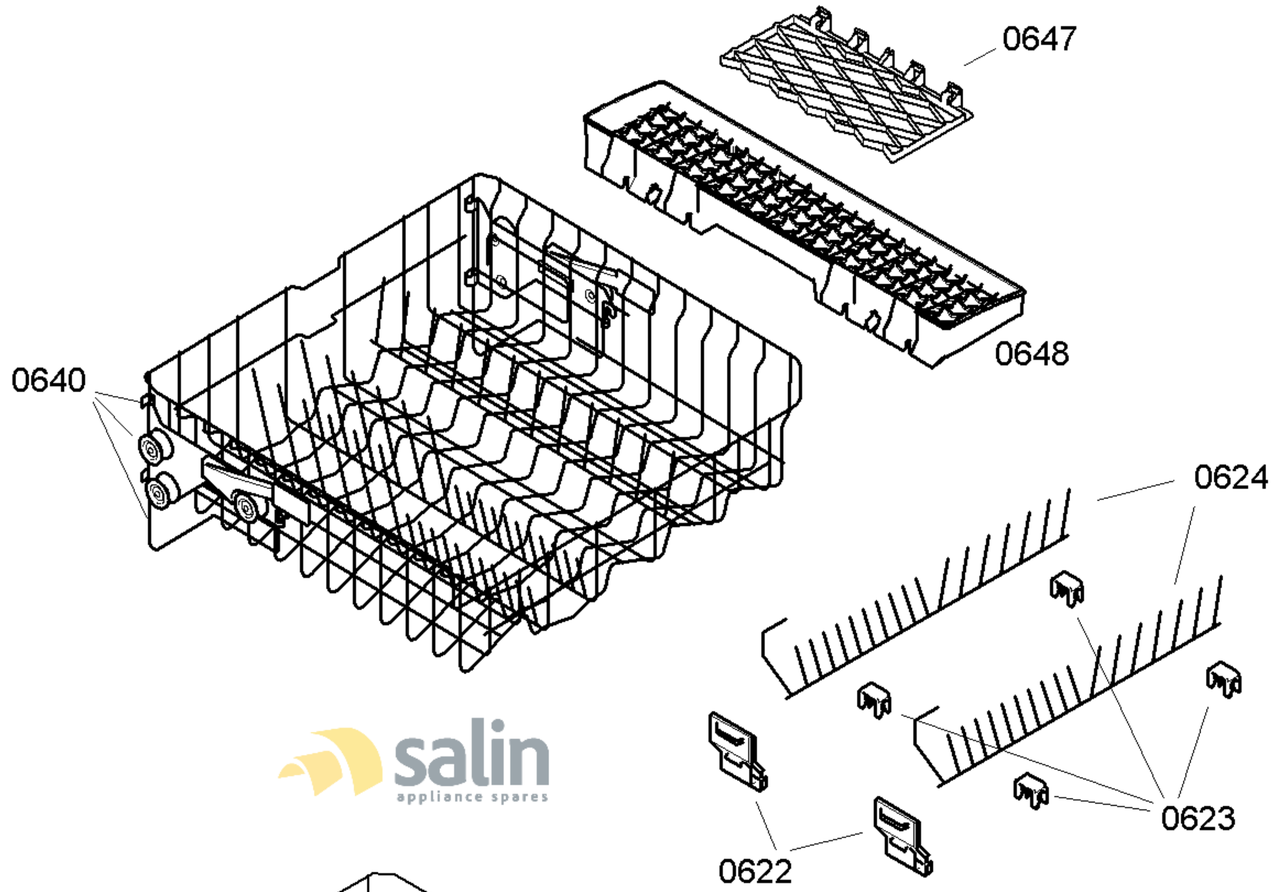

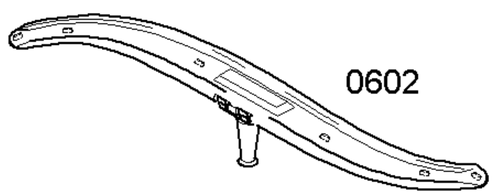

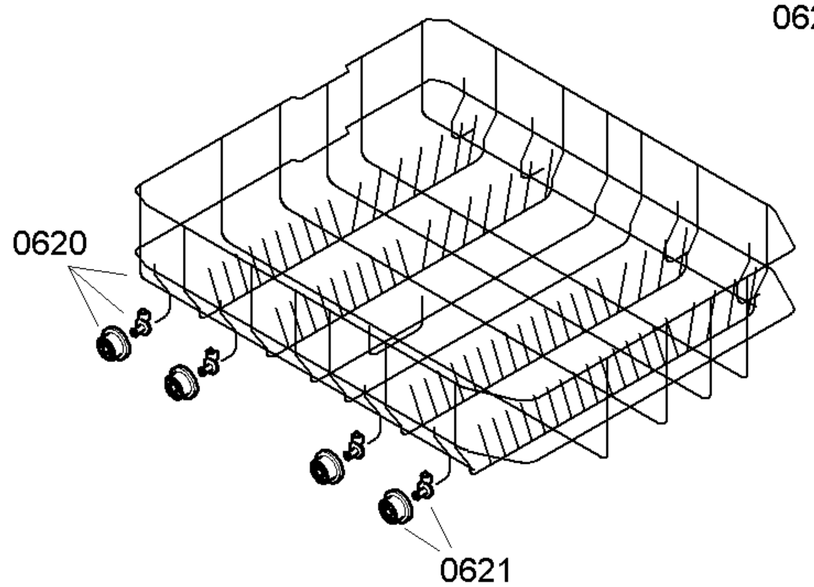

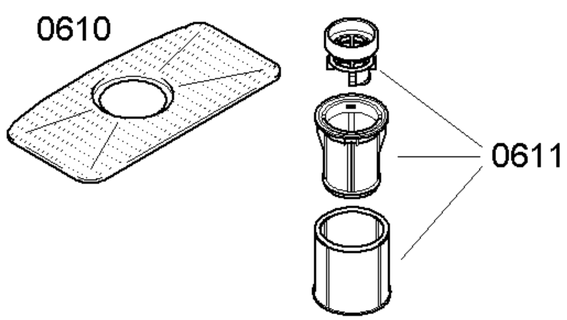

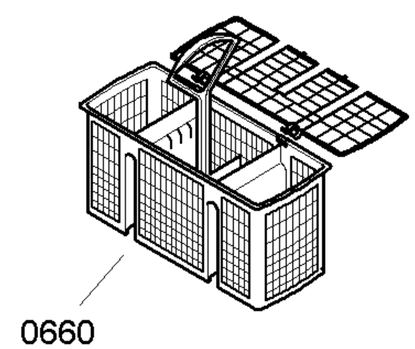

salin
appliance spares

58300000116810 aet 000 d 6/6

FAMILY : SRI55T16EU
MODEL NO: SRI55T16EU/02
Check Position No/Part No or Replacement No