0199

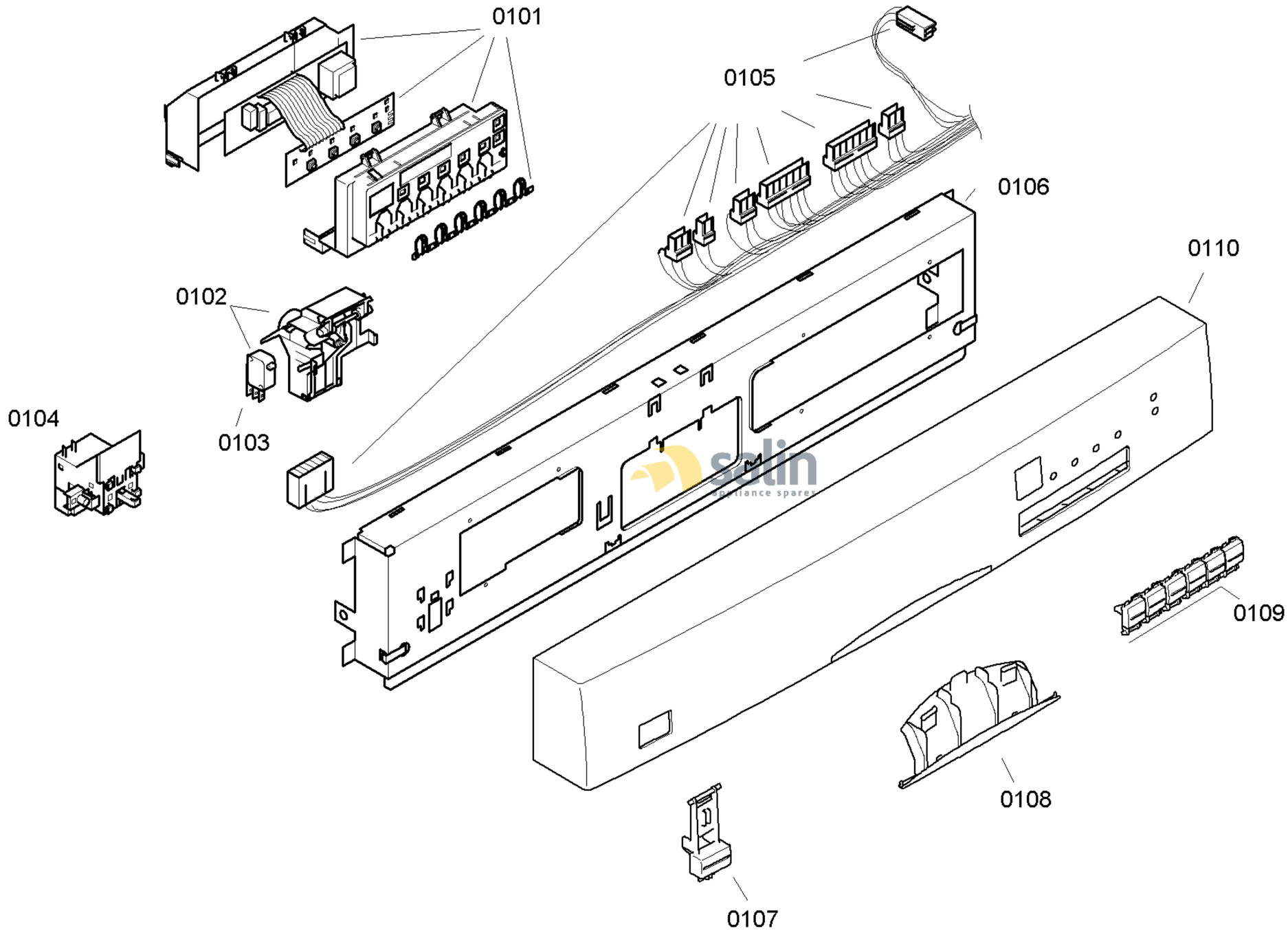

58300000130678 aet 000 a 1/6

FAMILY : SGS45M12II
MODEL NO: SGS45M12II/86
Check Position No/Part No or Replacement No

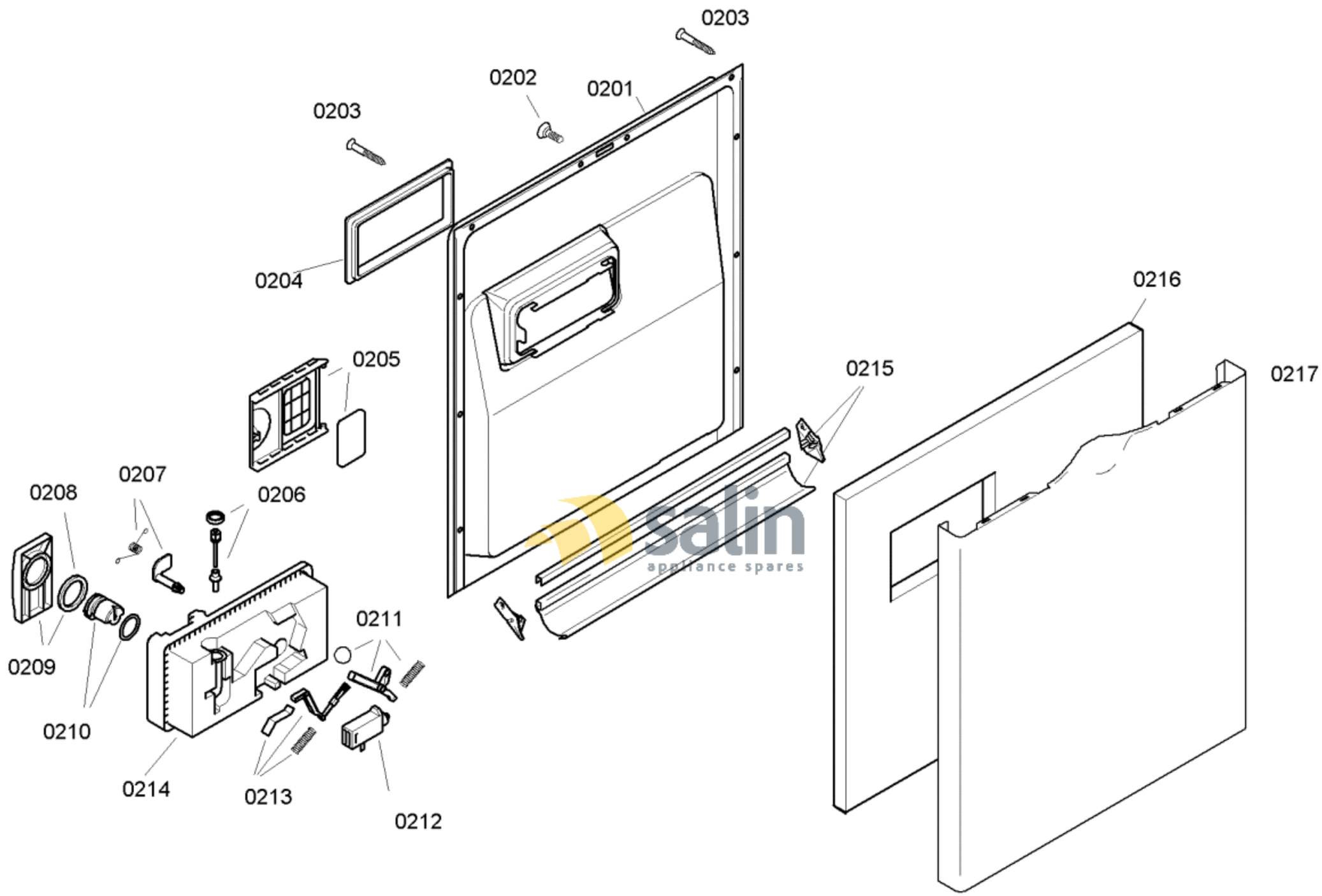

58300000130678 aet 000 a 2/6

FAMILY : SGS45M12II

MODEL NO: SGS45M12II/86

Check Position No/Part No or Replacement No

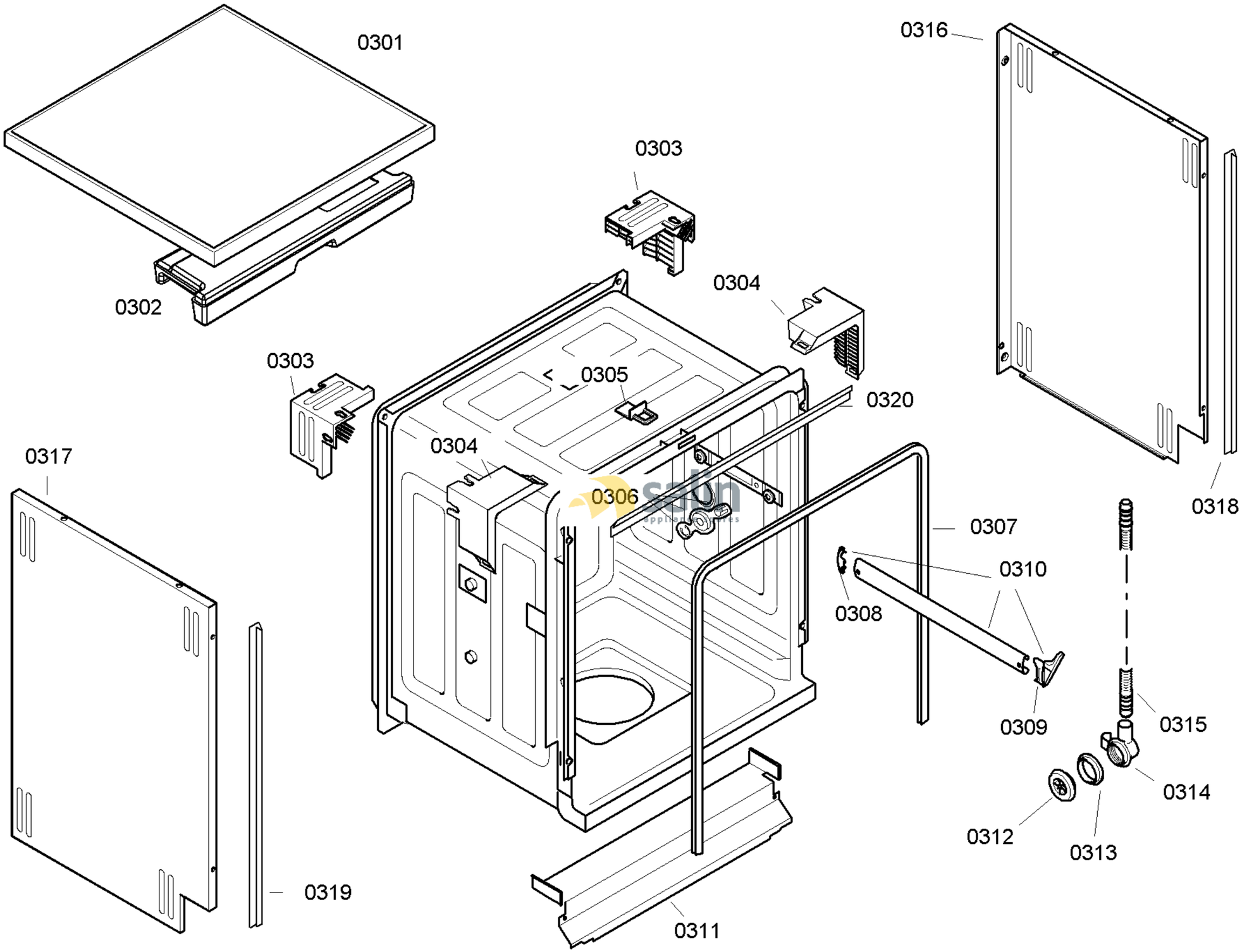

58300000130678 aet 000 a 3/6

FAMILY : SGS45M12II
MODEL NO: SGS45M12II/86
Check Position No/Part No or Replacement No

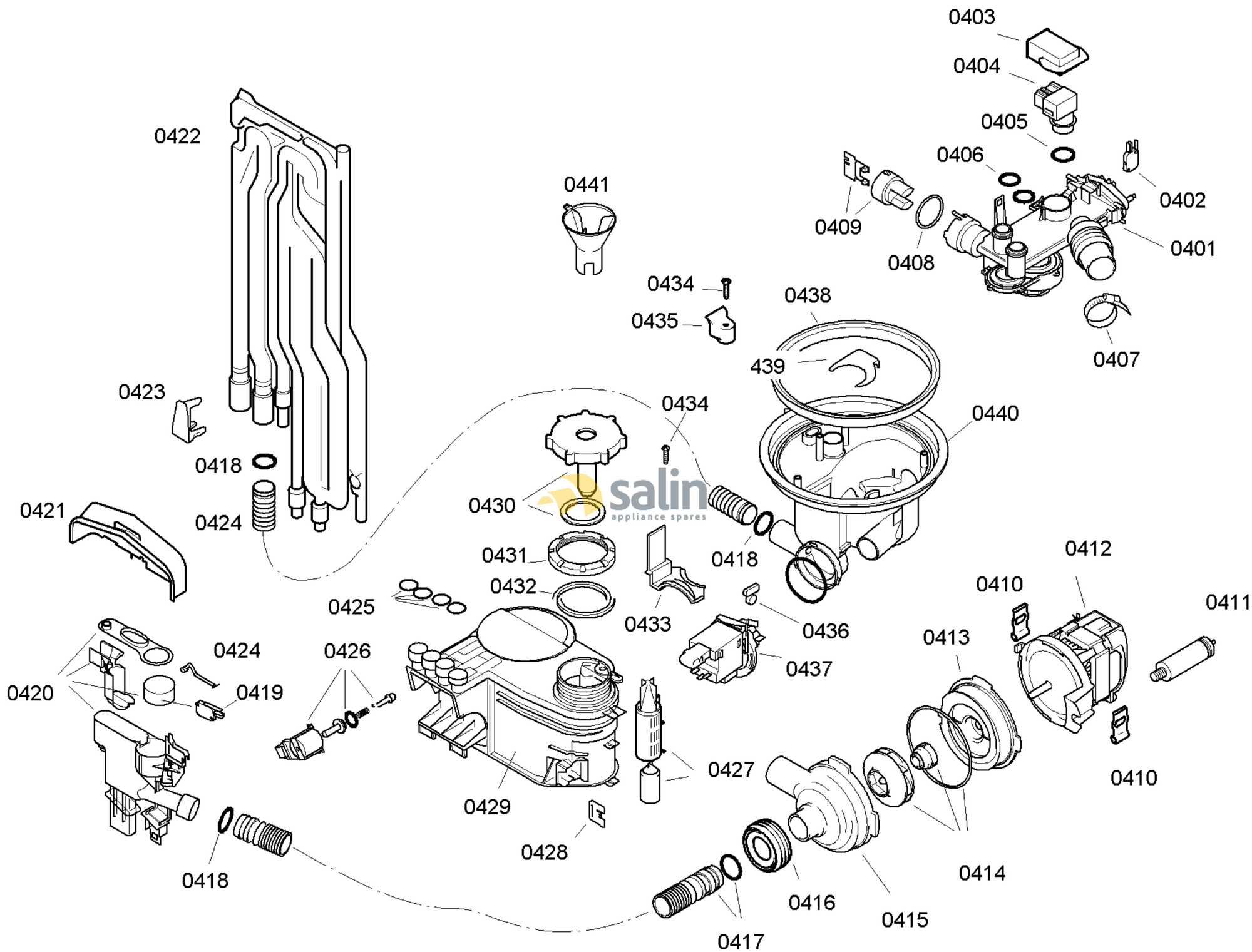

58300000130678 aet 000 a 4/6

FAMILY : SGS45M12II
MODEL NO: SGS45M12II/86
Check Position No/Part No or Replacement No

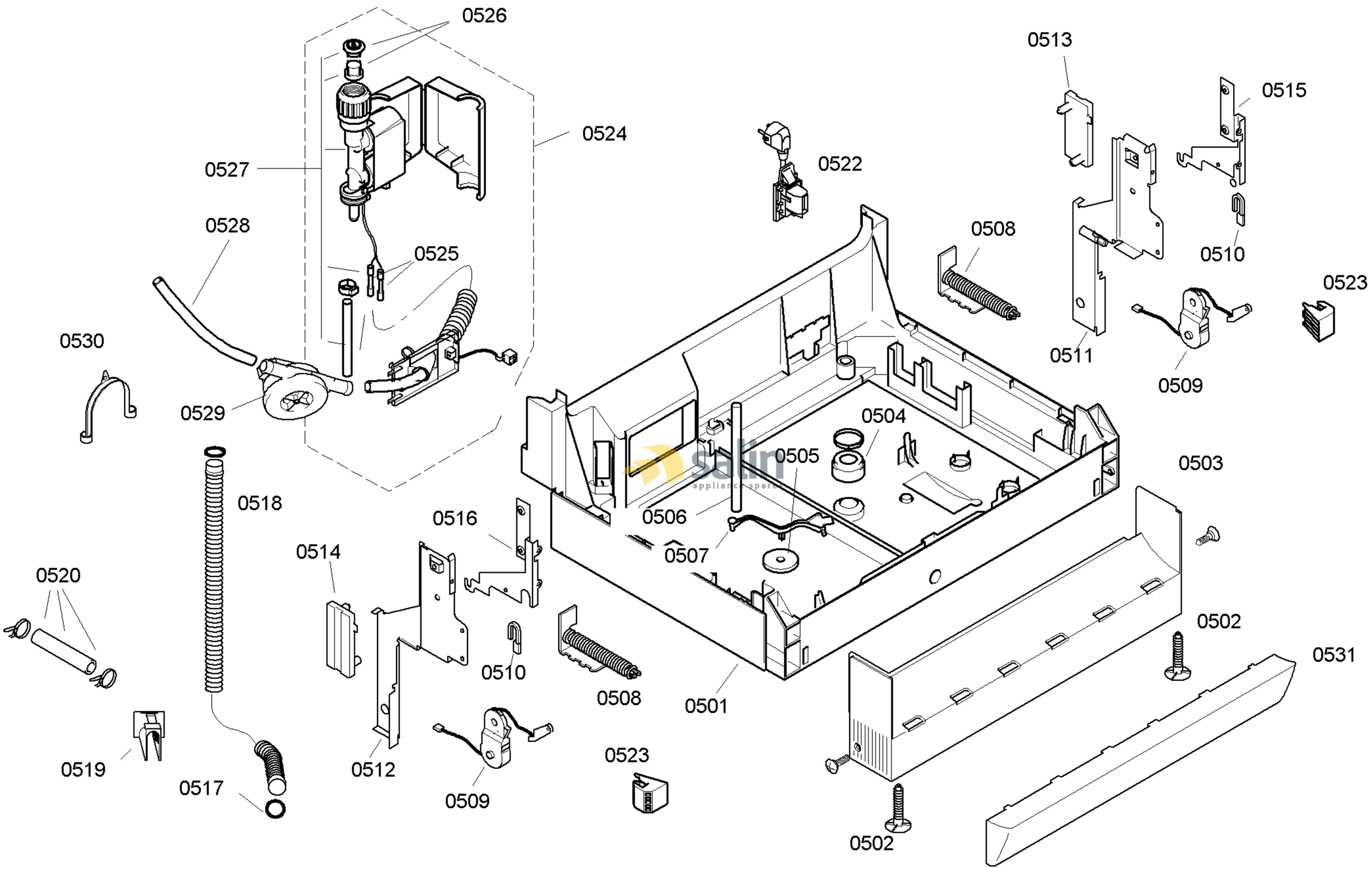

58300000130678 aet 000 a 5/6

FAMILY : SGS45M12II
MODEL NO: SGS45M12II/86
Check Position No/Part No or Replacement No

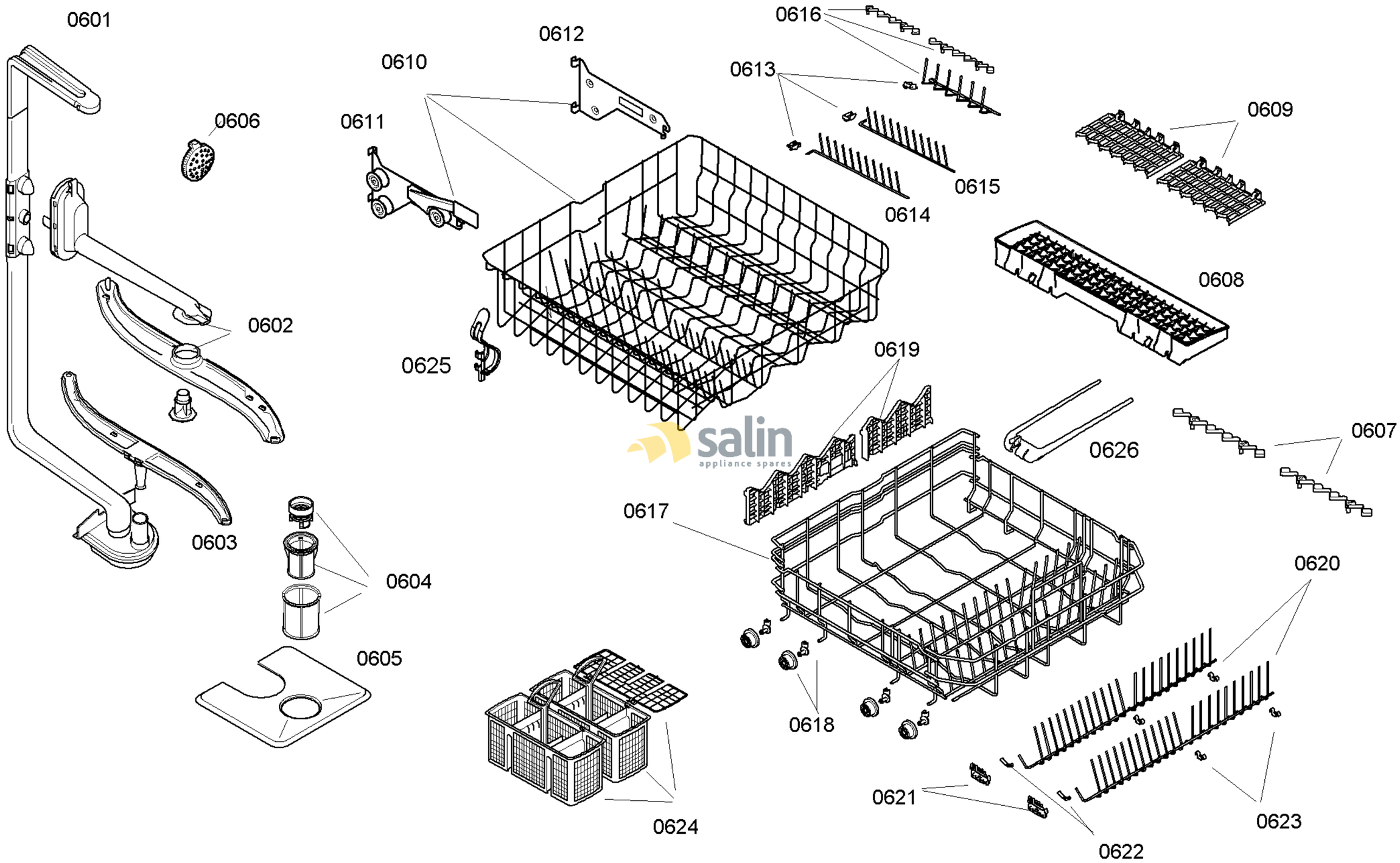

58300000130678 aet 000 a 6/6

FAMILY : SGS45M12II
MODEL NO: SGS45M12II/86
Check Position No/Part No or Replacement No