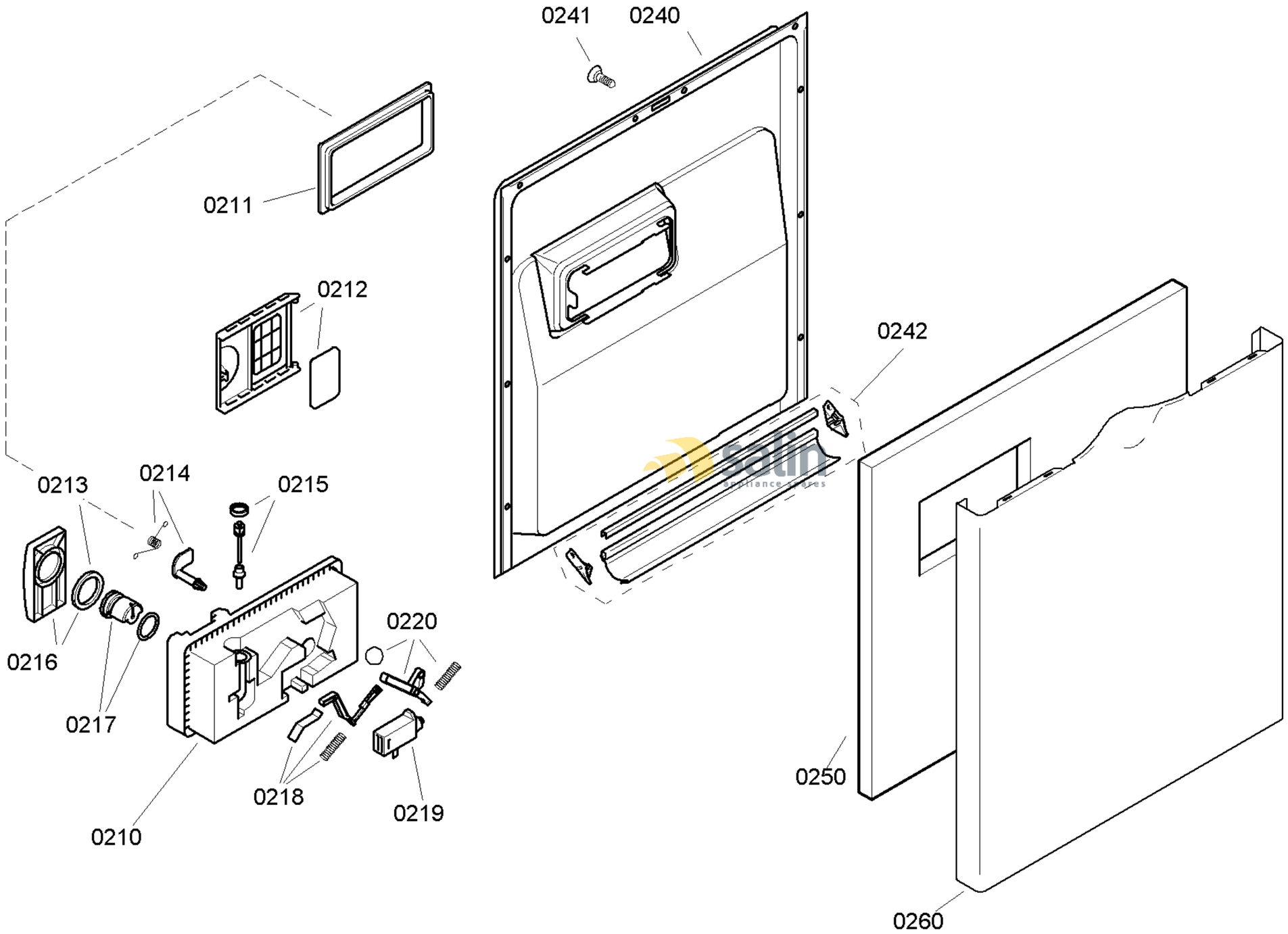

58300000107987 aet 000 d 2/6

FAMILY : SGS85M22EU
MODEL NO: SGS85M22EU/68
Check Position No/Part No or Replacement No

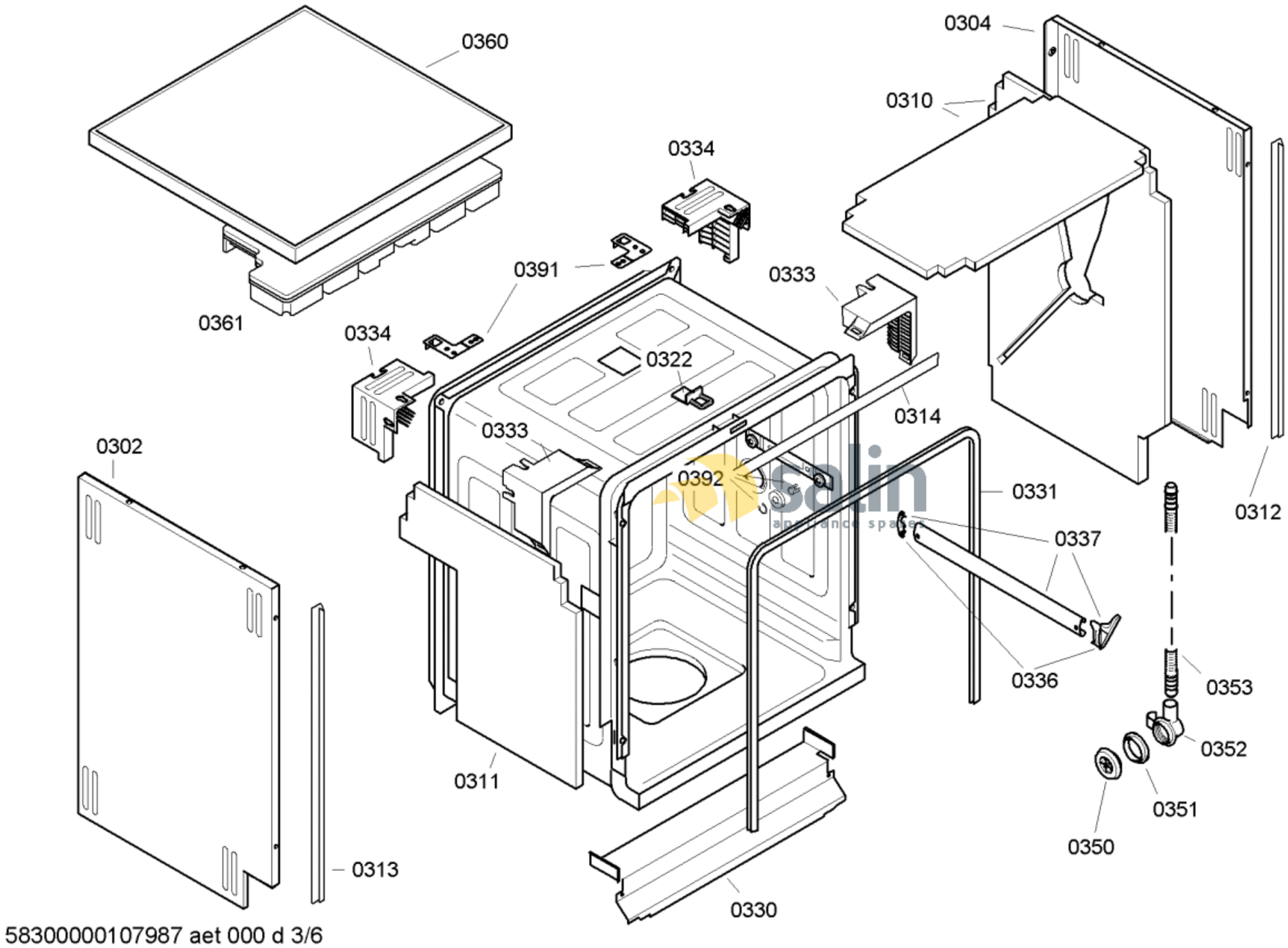

FAMILY : SGS85M22EU

MODEL NO: SGS85M22EU/68

Check Position No/Part No or Replacement No

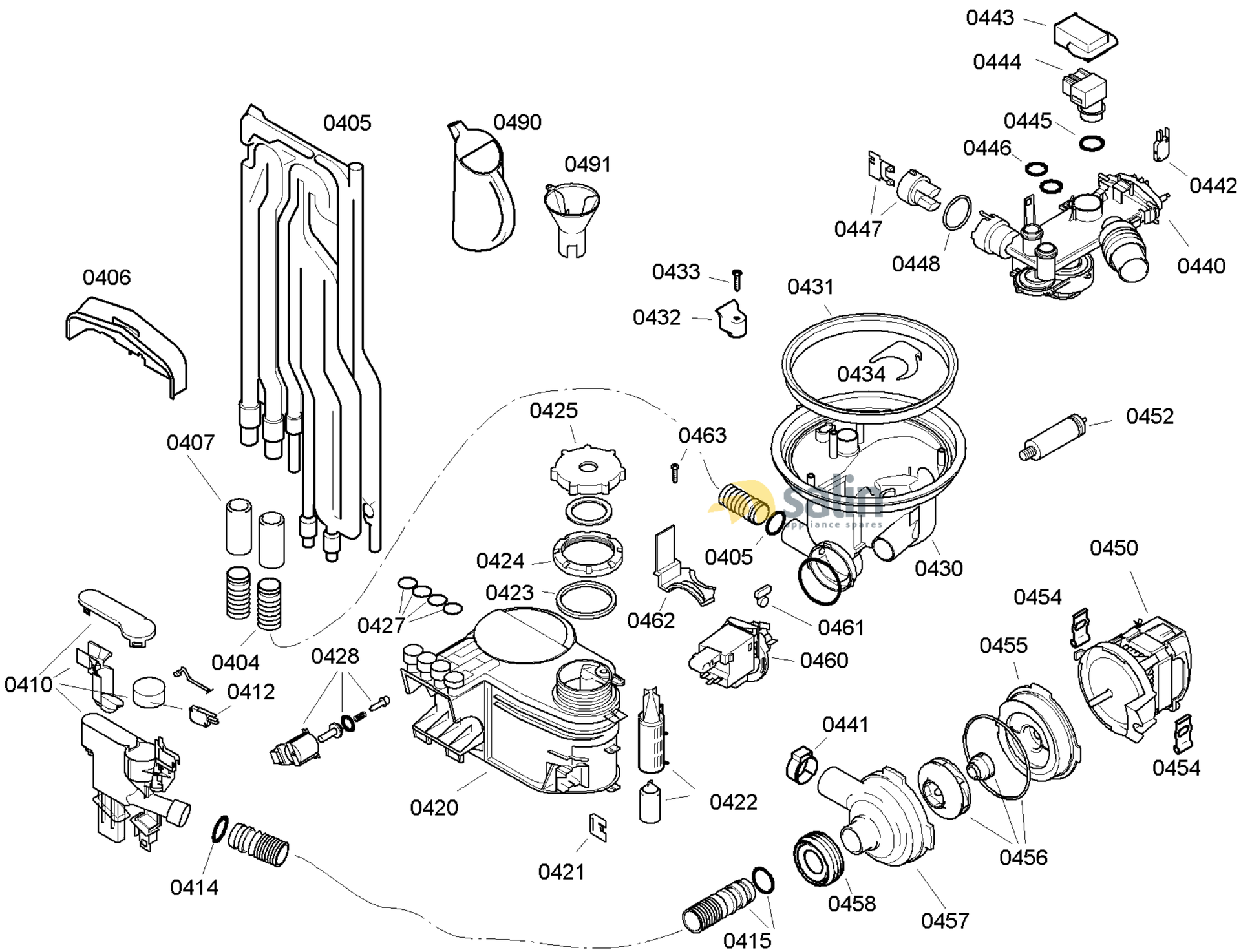

58300000107987 aet 000 d 4/6

FAMILY : SGS85M22EU
MODEL NO: SGS85M22EU/68
Check Position No/Part No or Replacement No

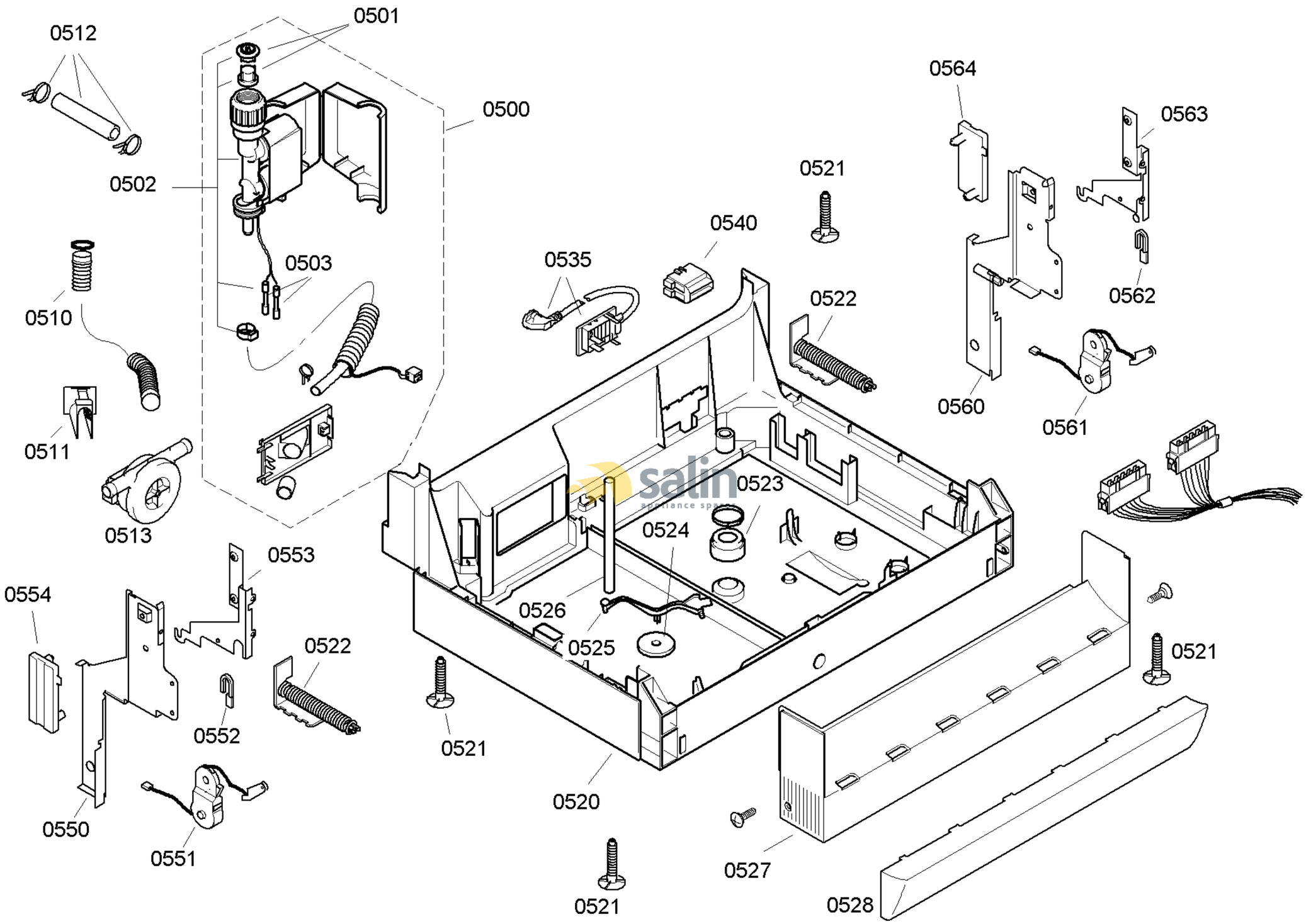

58300000107987 aet 000 d 5/6

FAMILY : SGS85M22EU
MODEL NO: SGS85M22EU/68
Check Position No/Part No or Replacement No

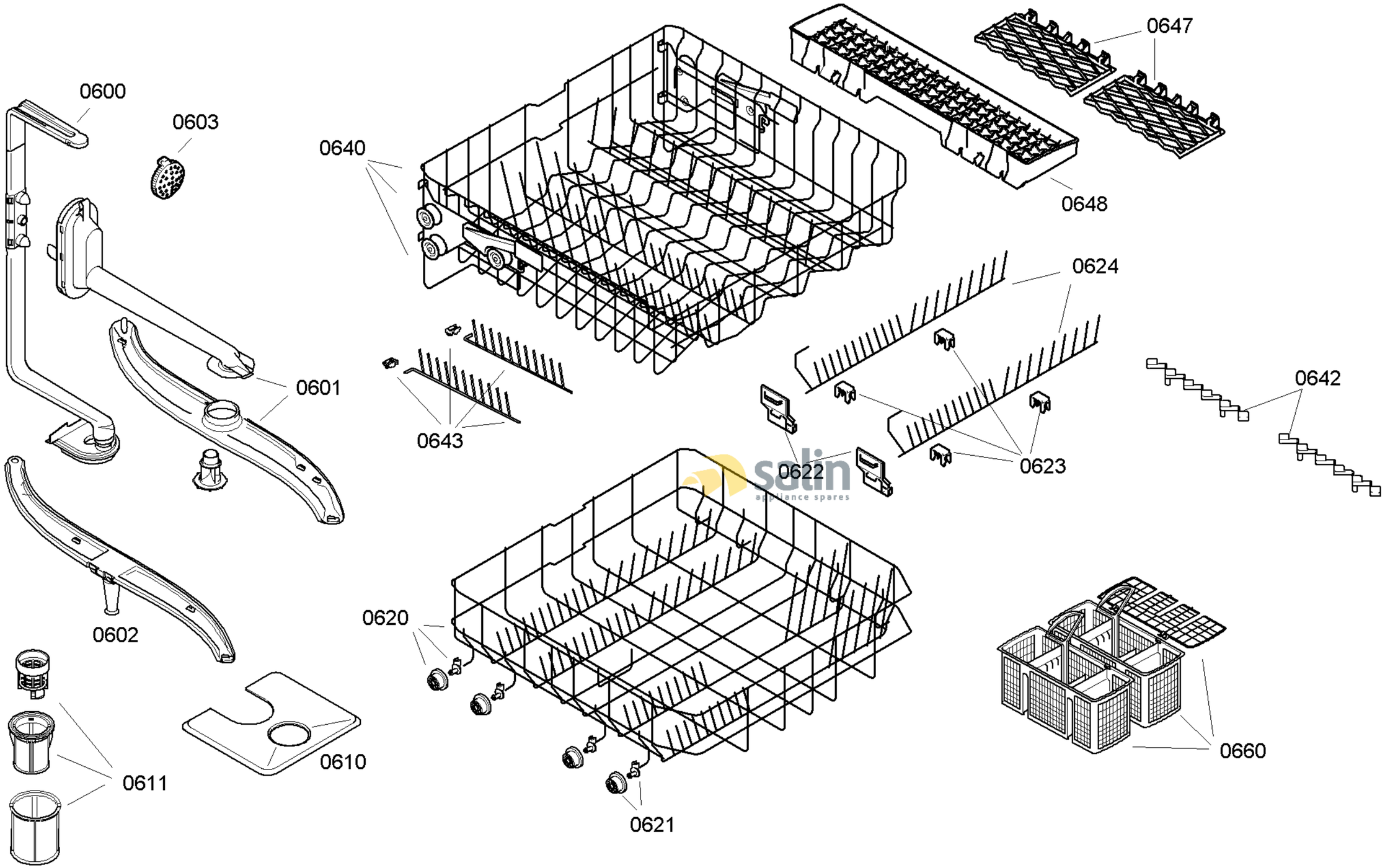

58300000107987 aet 000 d 6/6

FAMILY : SGS85M22EU
MODEL NO: SGS85M22EU/68
Check Position No/Part No or Replacement No