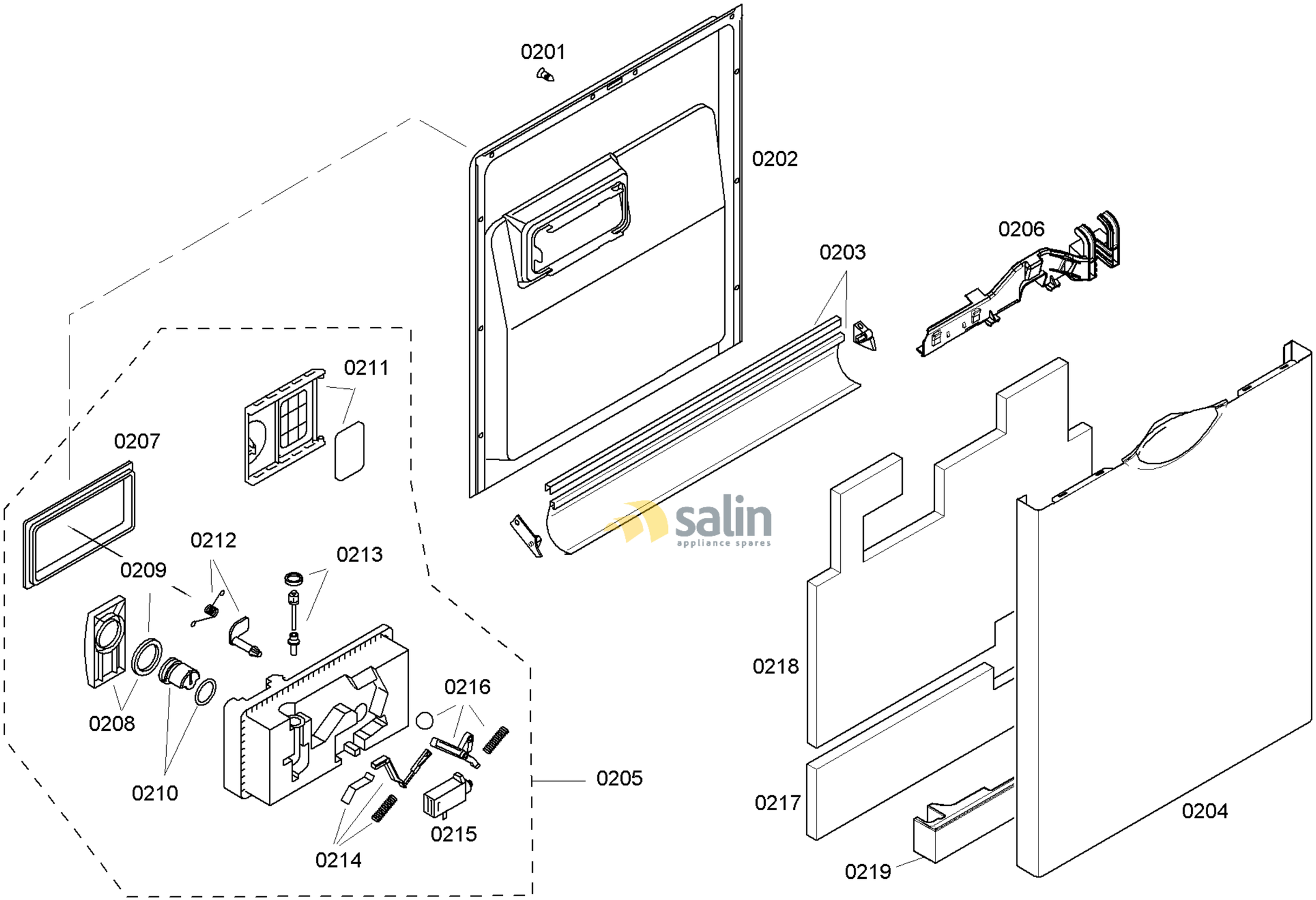

58300000132272 aet 000 a 2/6

FAMILY : SHE42L16UC
MODEL NO: SHE42L16UC/50
Check Position No/Part No or Replacement No

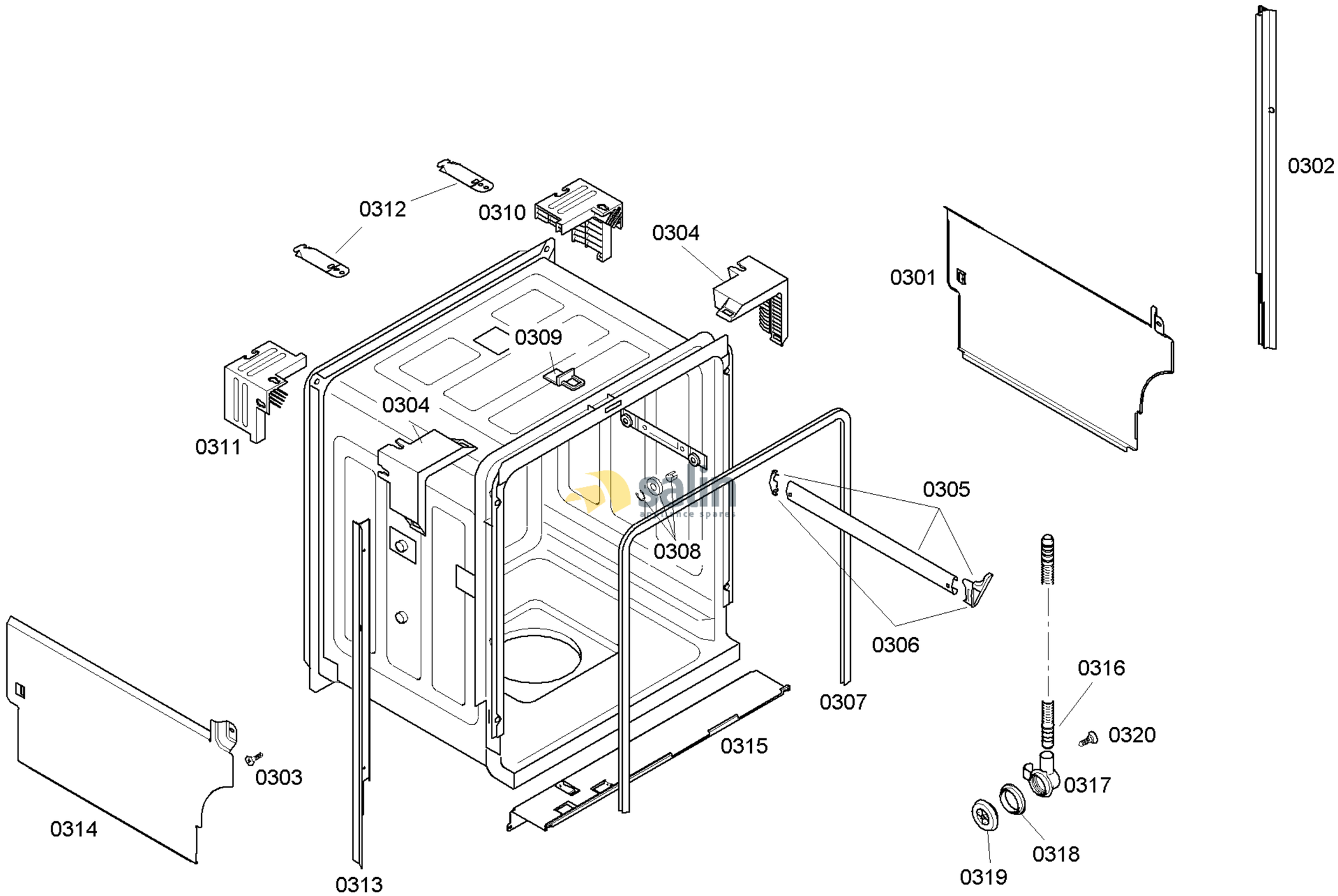

58300000132272 aet 000 a 3/6

FAMILY : SHE42L16UC
MODEL NO: SHE42L16UC/50
Check Position No/Part No or Replacement No

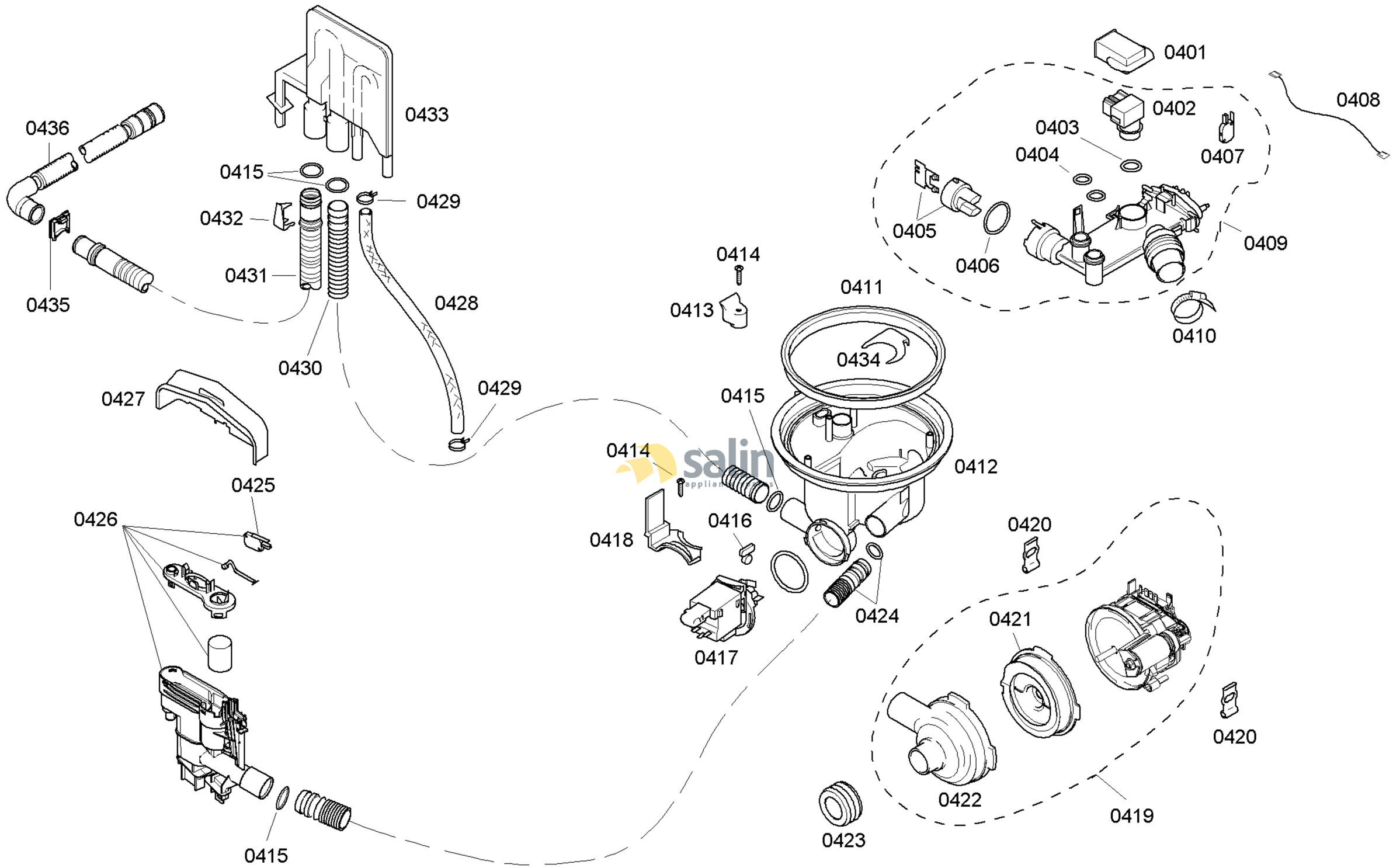

58300000132272 aet 000 a 4/6

FAMILY : SHE42L16UC
MODEL NO: SHE42L16UC/50
Check Position No/Part No or Replacement No

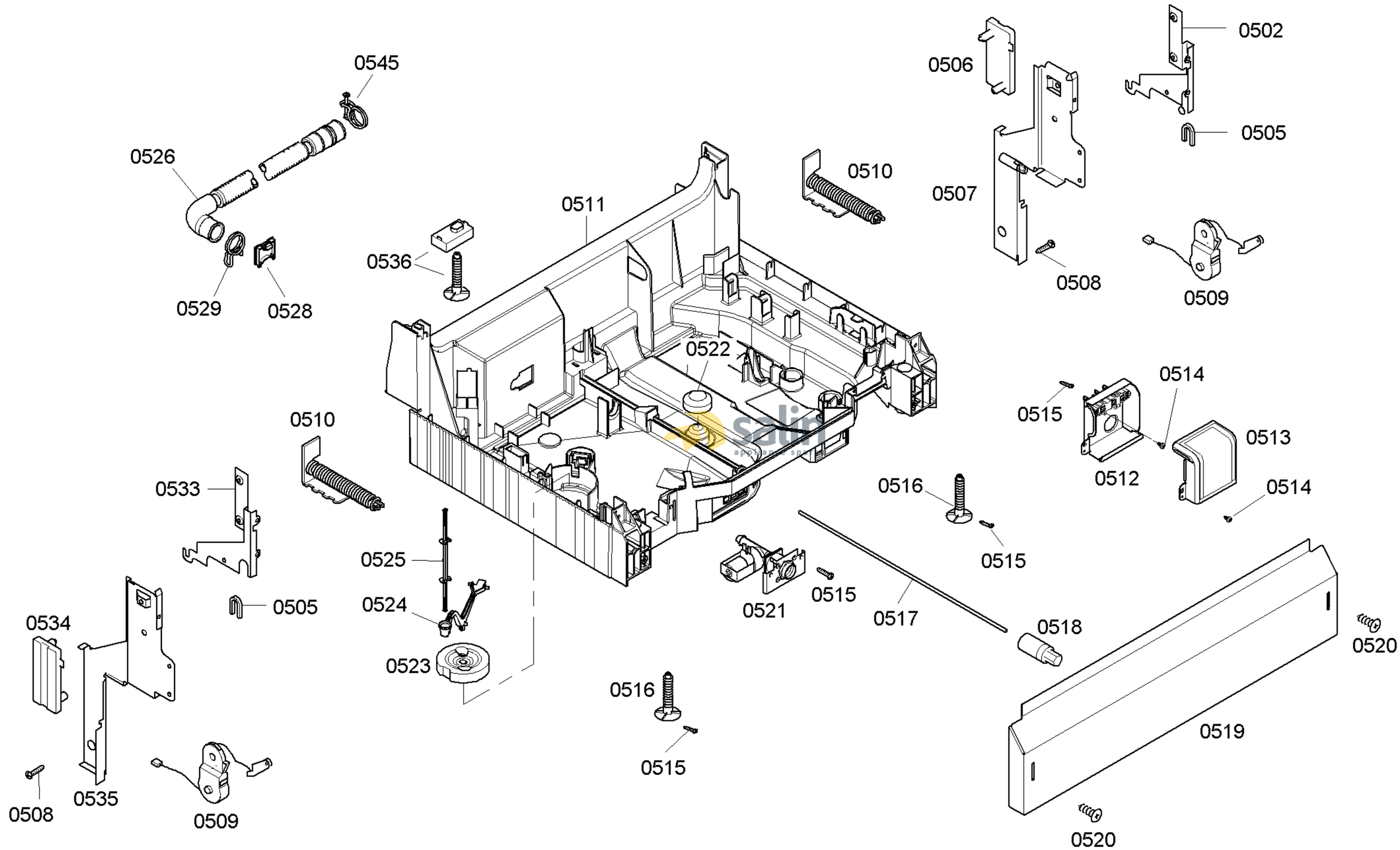

58300000132272 aet 000 a 5/6

FAMILY : SHE42L16UC
MODEL NO: SHE42L16UC/50
Check Position No/Part No or Replacement No

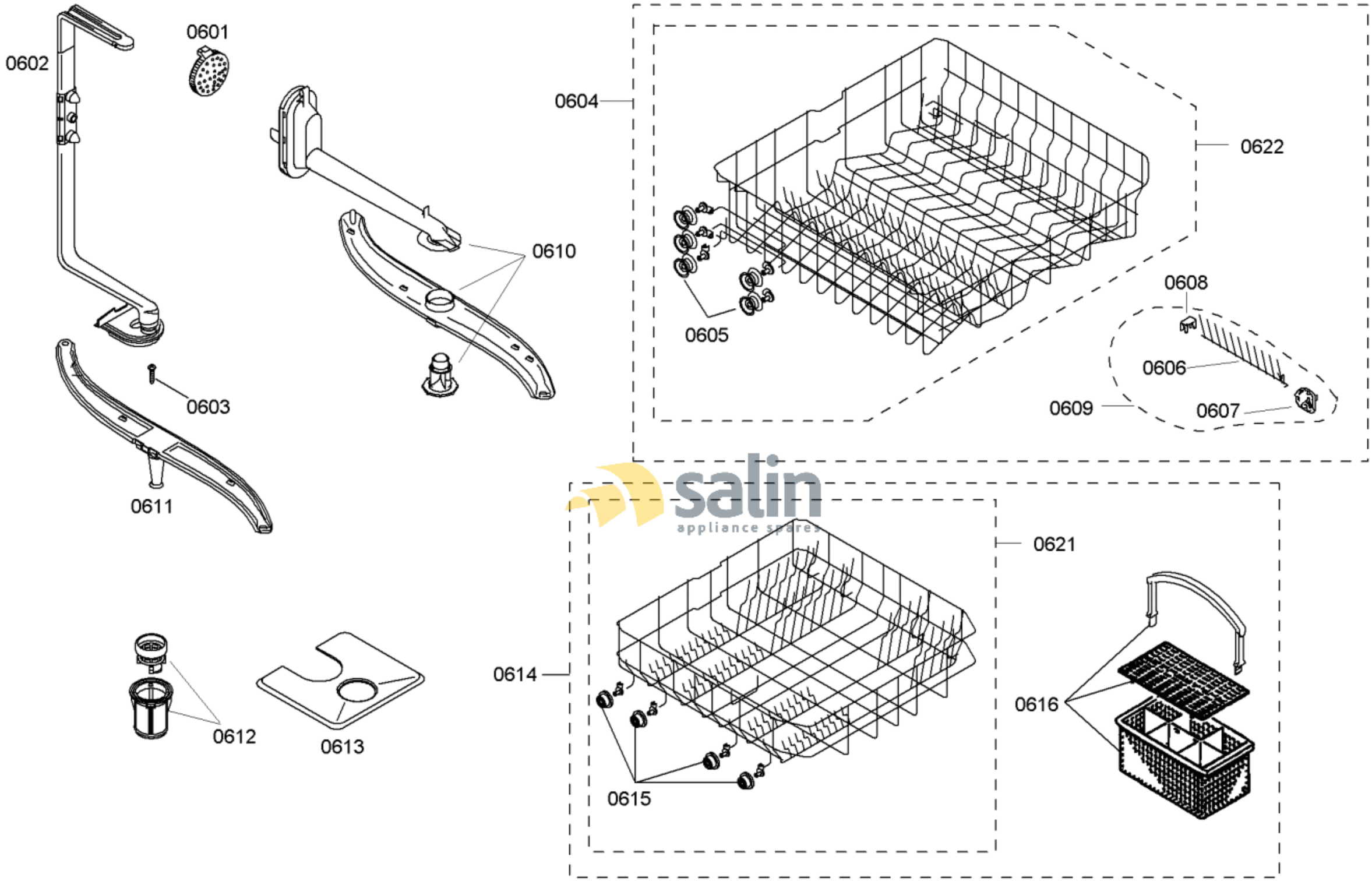

salin
appliance spares

58300000132272 aet 000 a 6/6

FAMILY : SHE42L16UC

MODEL NO: SHE42L16UC/50

Check Position No/Part No or Replacement No