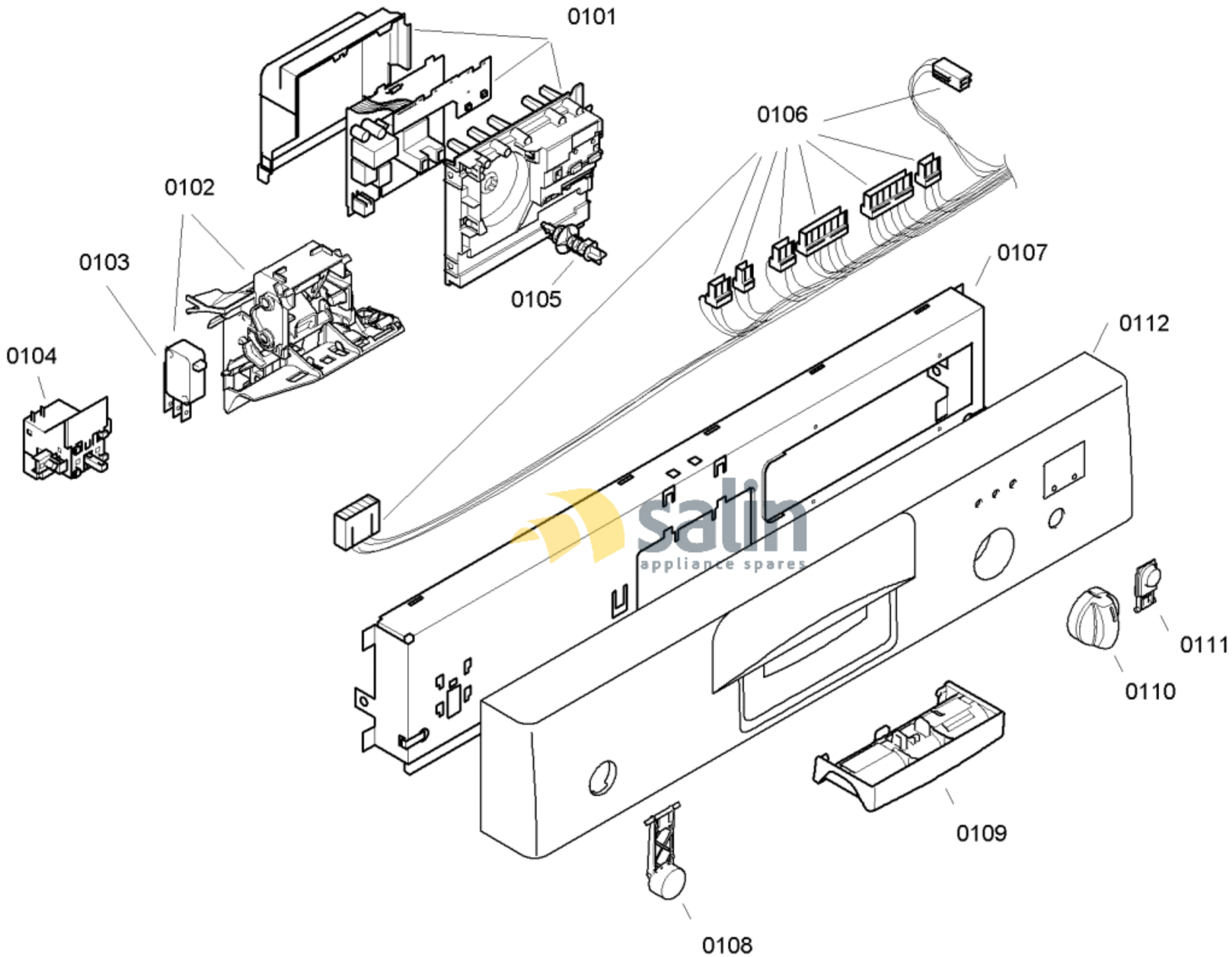

58300000120119 aet 000 b 1/6

FAMILY : SGS55E02BR

MODEL NO: SGS55E02BR/01

Check Position No/Part No or Replacement No

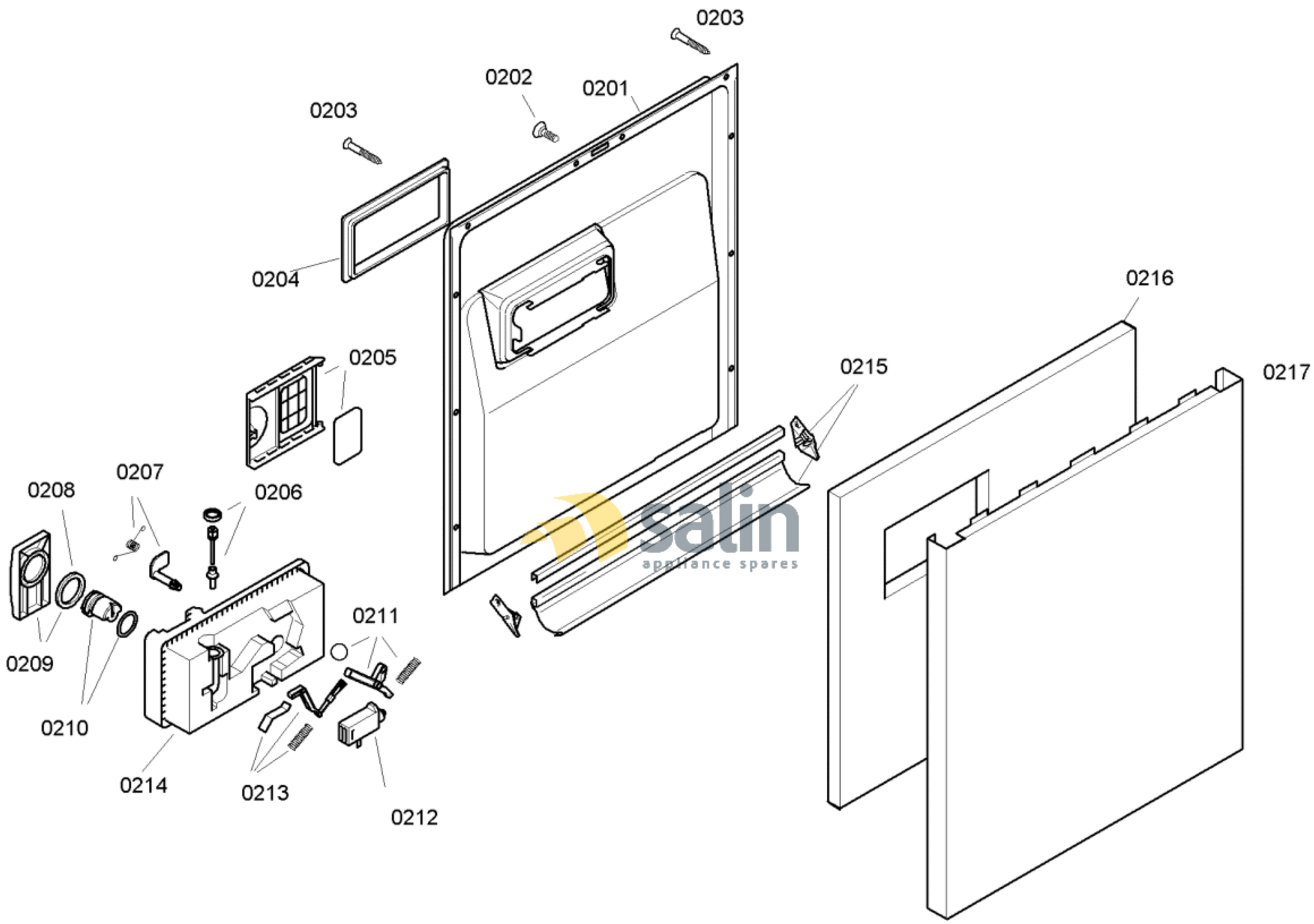

58300000120119 aet 000 b 2/6

FAMILY : SGS55E02BR

MODEL NO: SGS55E02BR/01

Check Position No/Part No or Replacement No

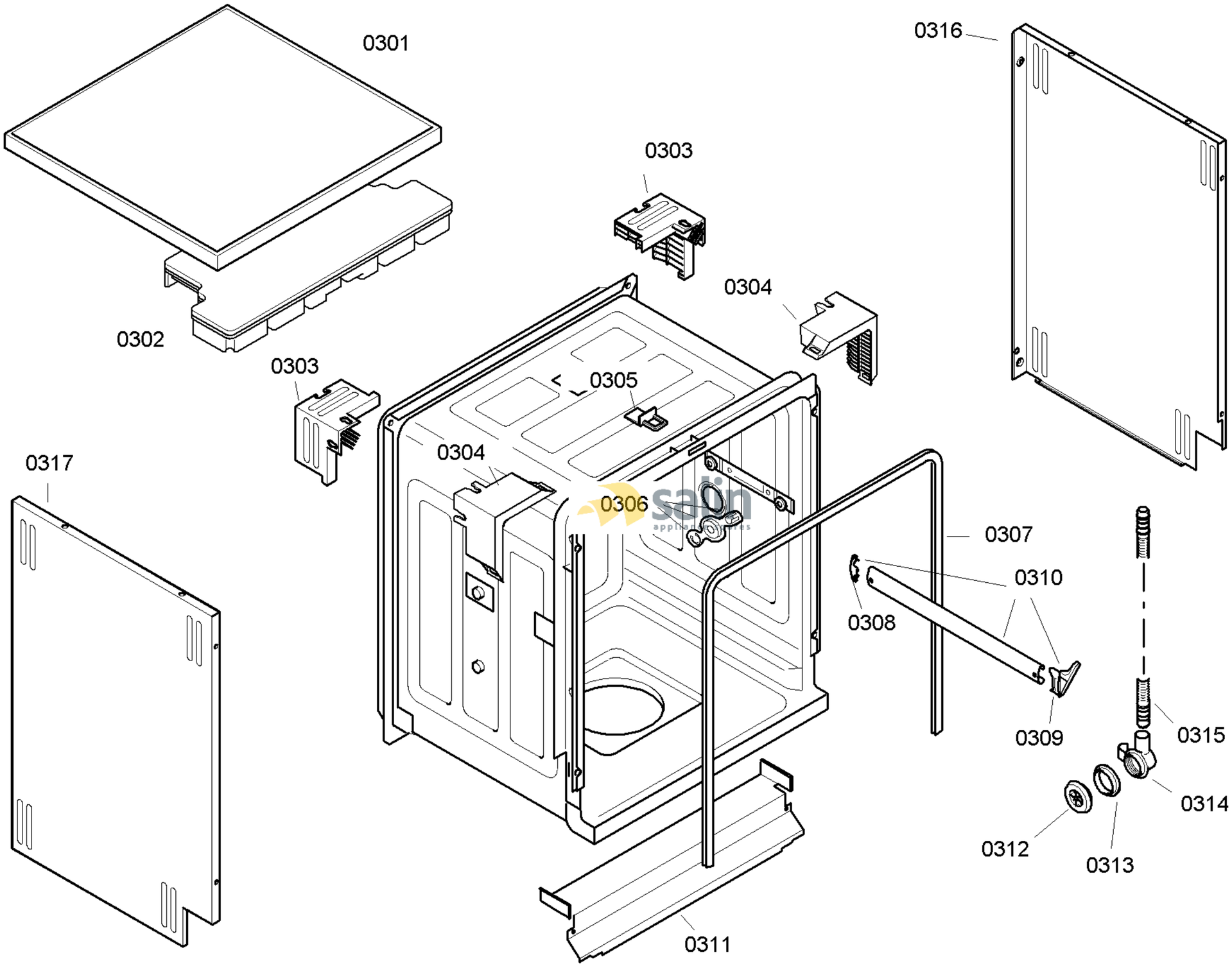

58300000120119 aet 000 b 3/6

FAMILY : SGS55E02BR
MODEL NO: SGS55E02BR/01
Check Position No/Part No or Replacement No

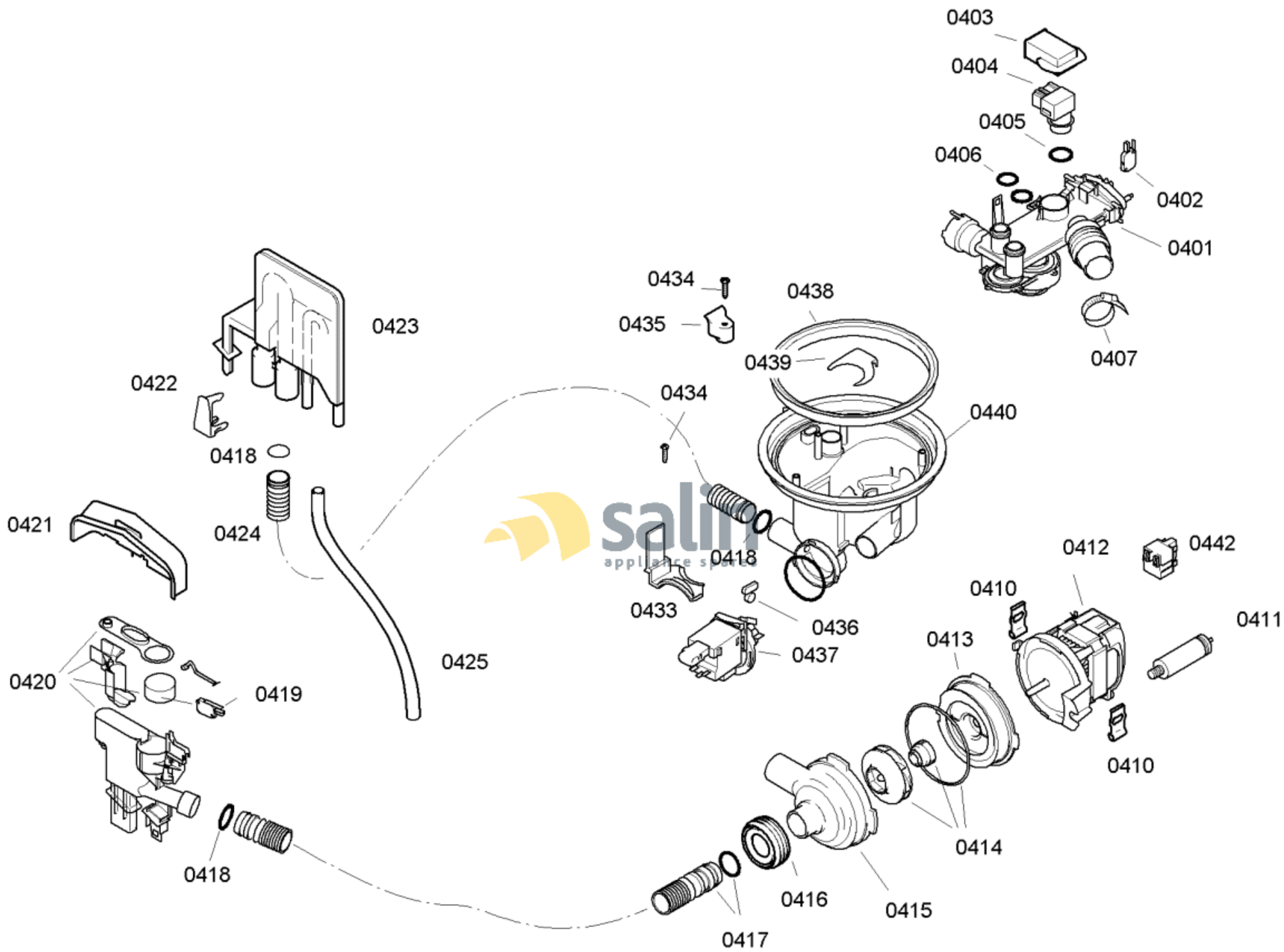

58300000120119 aet 000 b 4/6

FAMILY : SGS55E02BR

MODEL NO: SGS55E02BR/01

Check Position No/Part No or Replacement No

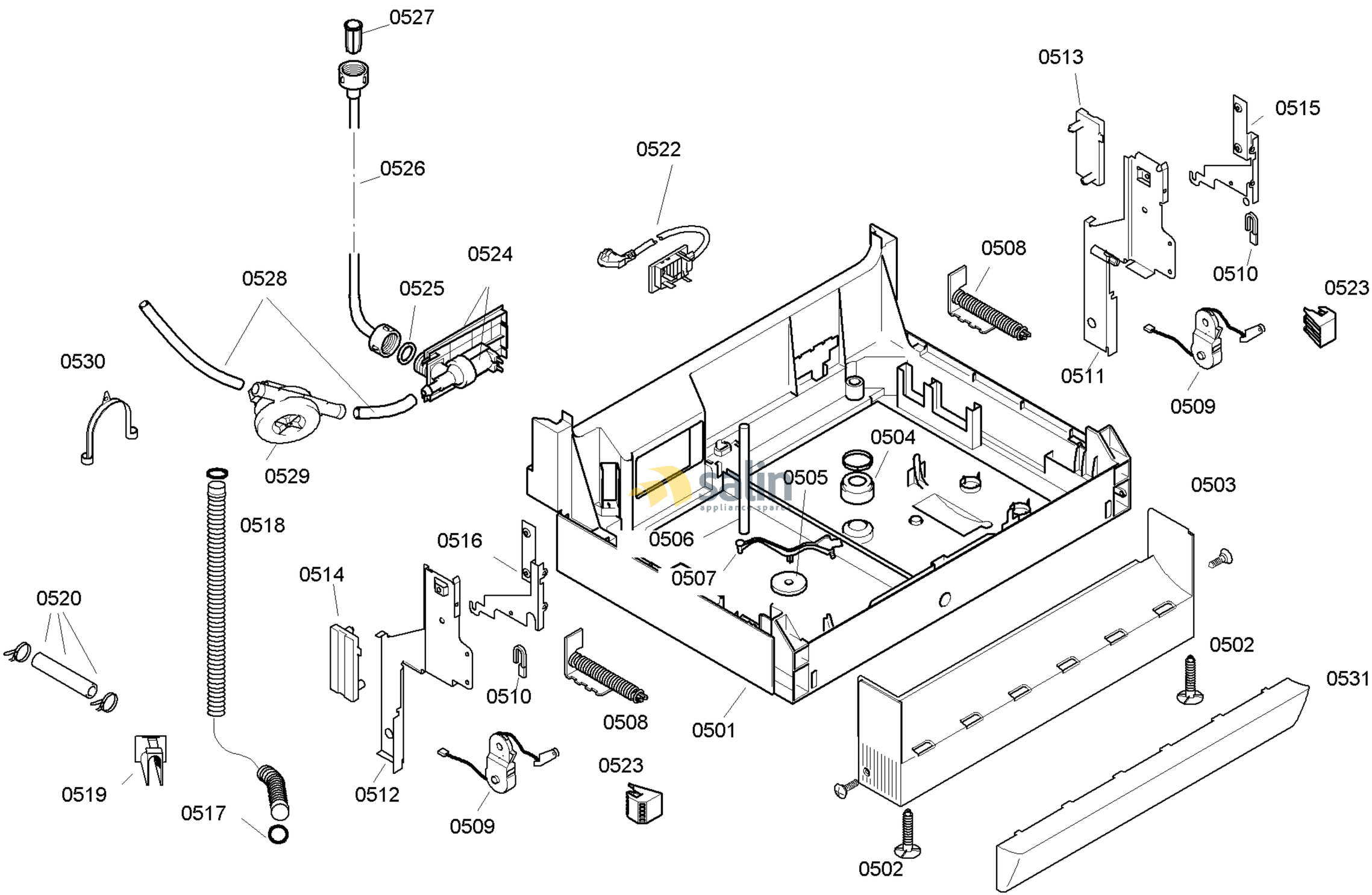

58300000120119 aet 000 b 5/6

FAMILY : SGS55E02BR
MODEL NO: SGS55E02BR/01
Check Position No/Part No or Replacement No

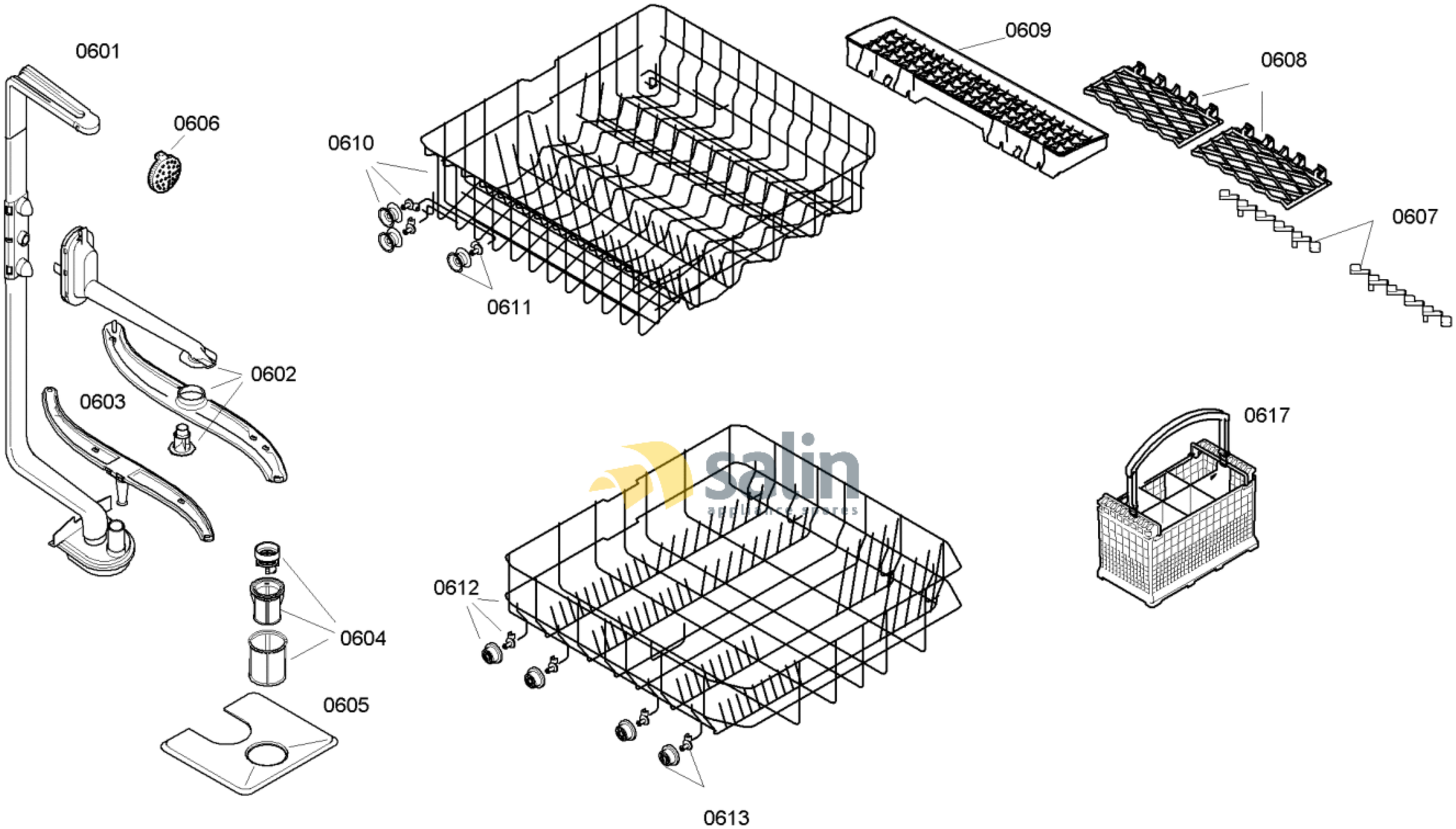

58300000120119 aet 000 b 6/6

FAMILY : SGS55E02BR

MODEL NO: SGS55E02BR/01

Check Position No/Part No or Replacement No