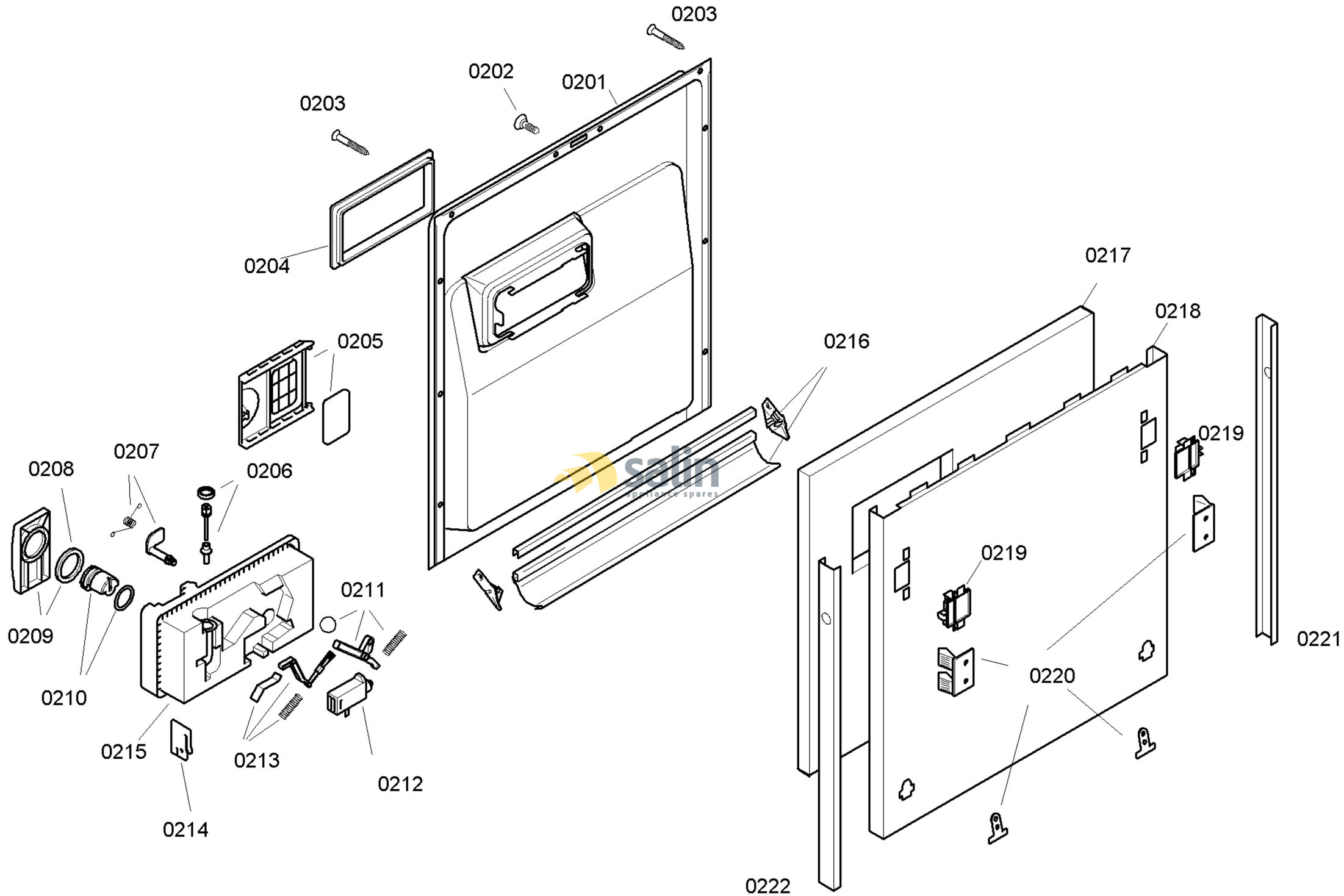

58300000109006 aet 000 c 2/6

FAMILY : SGI45M05EU
MODEL NO: SGI45M05EU/67
Check Position No/Part No or Replacement No

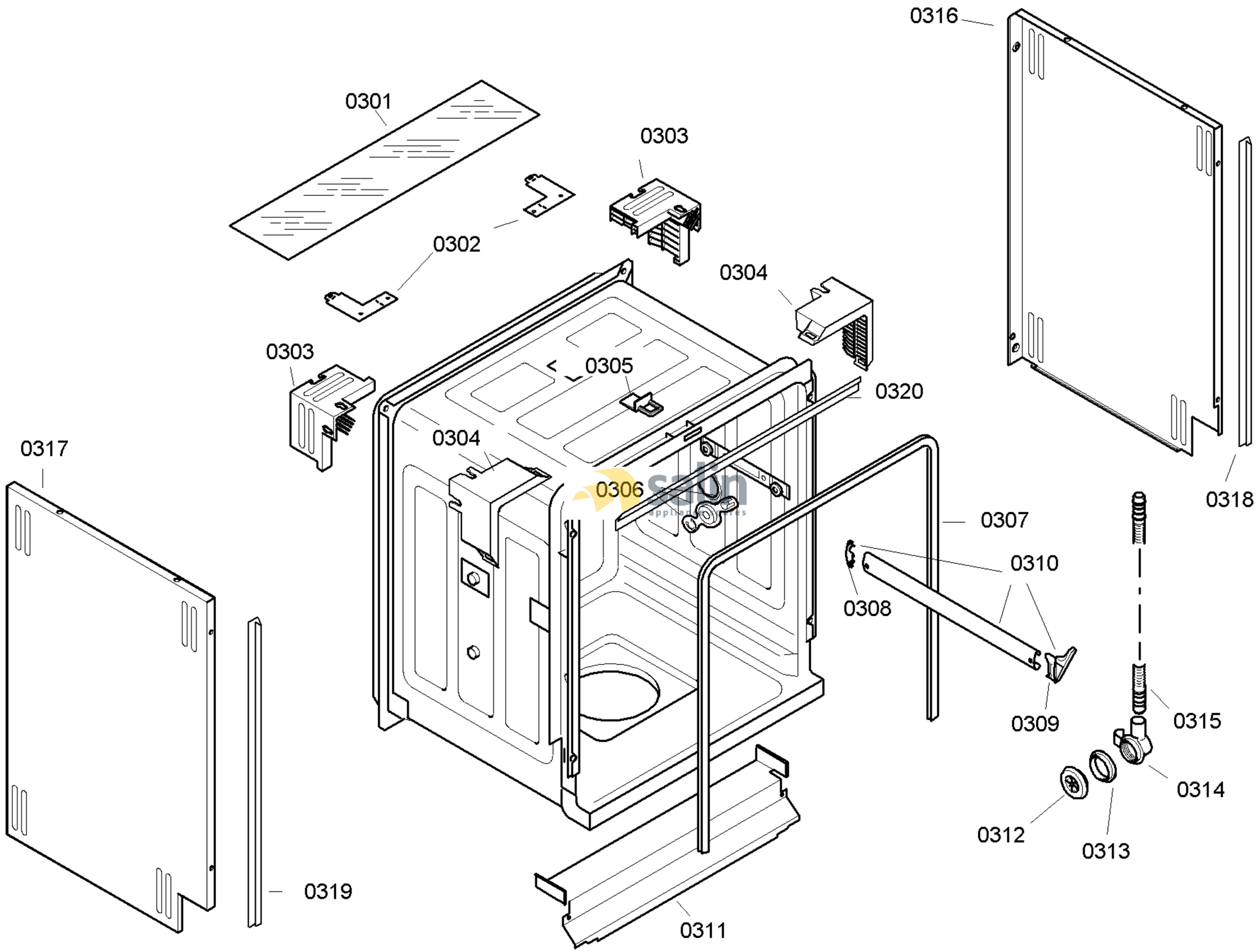

58300000109006 aet 000 c 3/6

FAMILY : SGI45M05EU
MODEL NO: SGI45M05EU/67
Check Position No/Part No or Replacement No

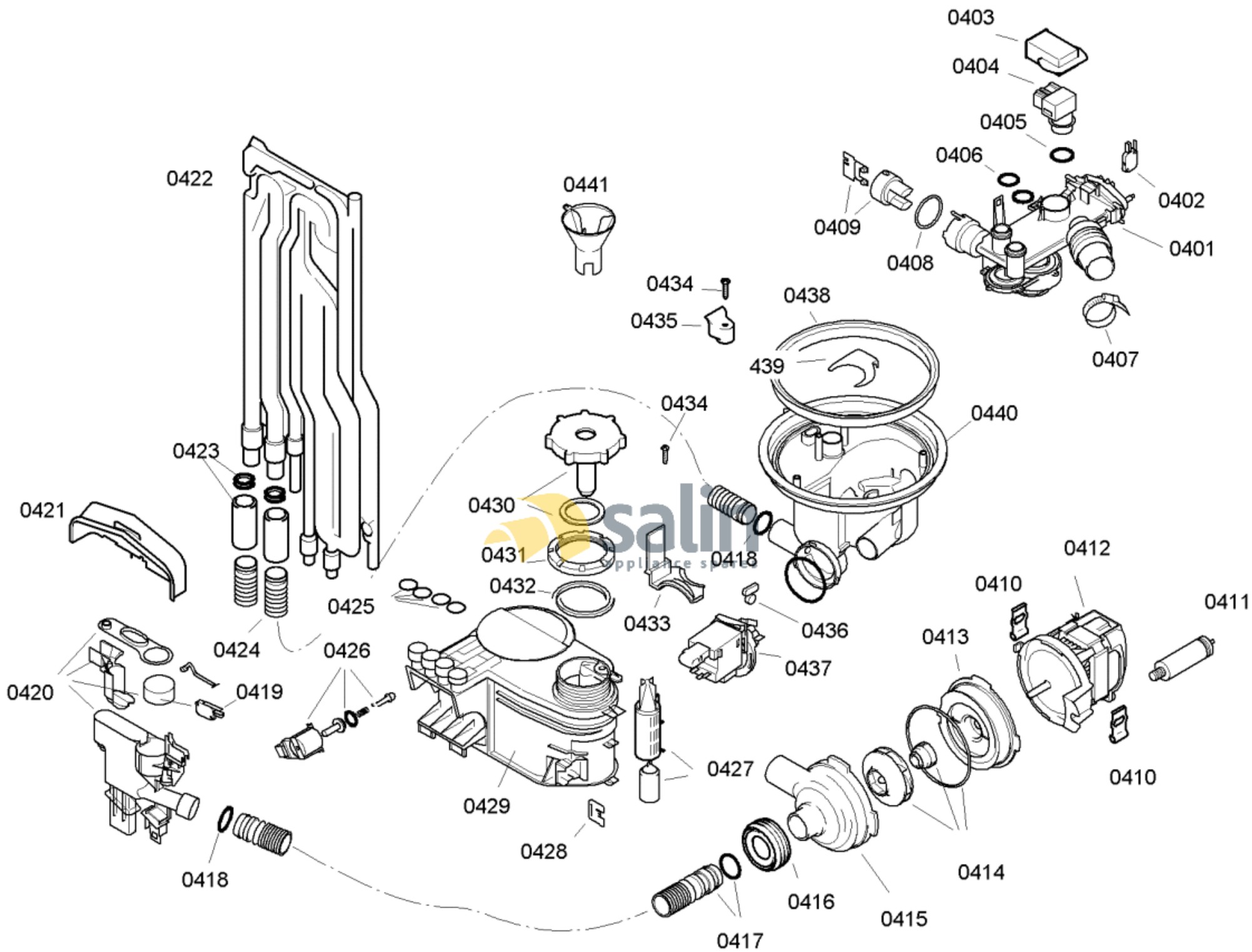

58300000109006 aet 000 c 4/6

FAMILY : SGI45M05EU

MODEL NO: SGI45M05EU/67

Check Position No/Part No or Replacement No

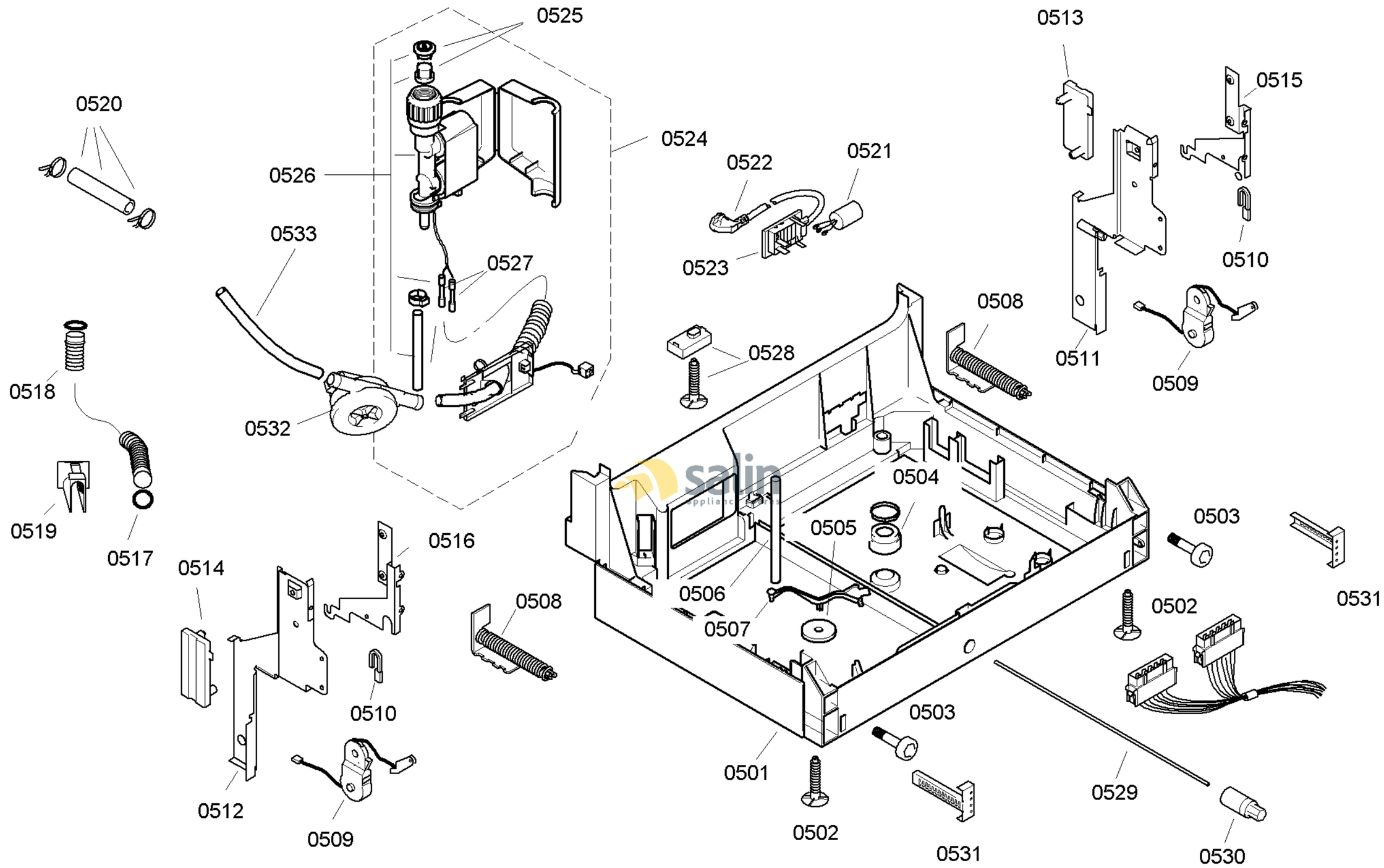

58300000109006 aet 000 c 5/6

FAMILY : SGI45M05EU
MODEL NO: SGI45M05EU/67
Check Position No/Part No or Replacement No