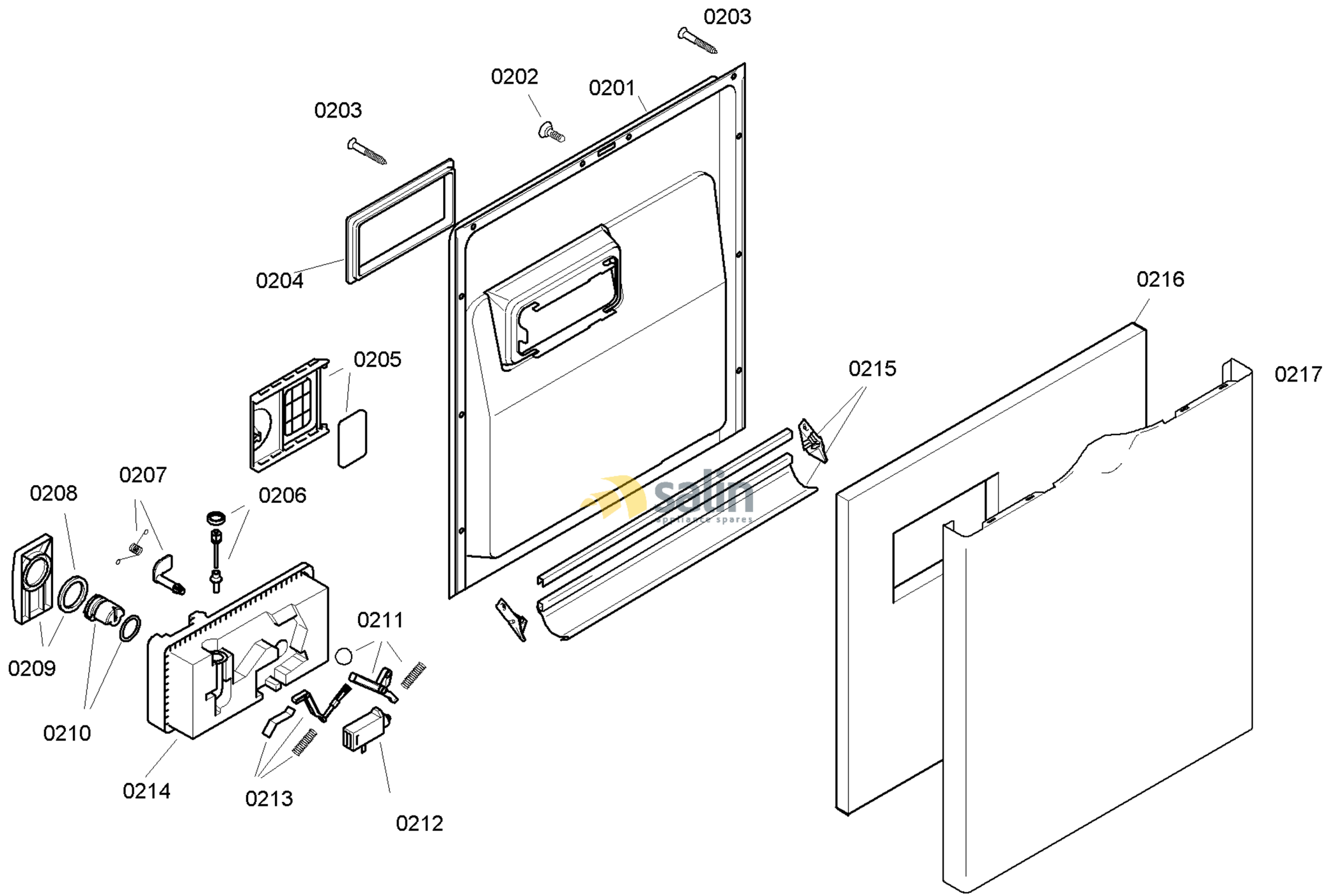

58300000117377 aet 000 b 2/6

FAMILY : SGS45M18II
MODEL NO: SGS45M18II/01
Check Position No/Part No or Replacement No

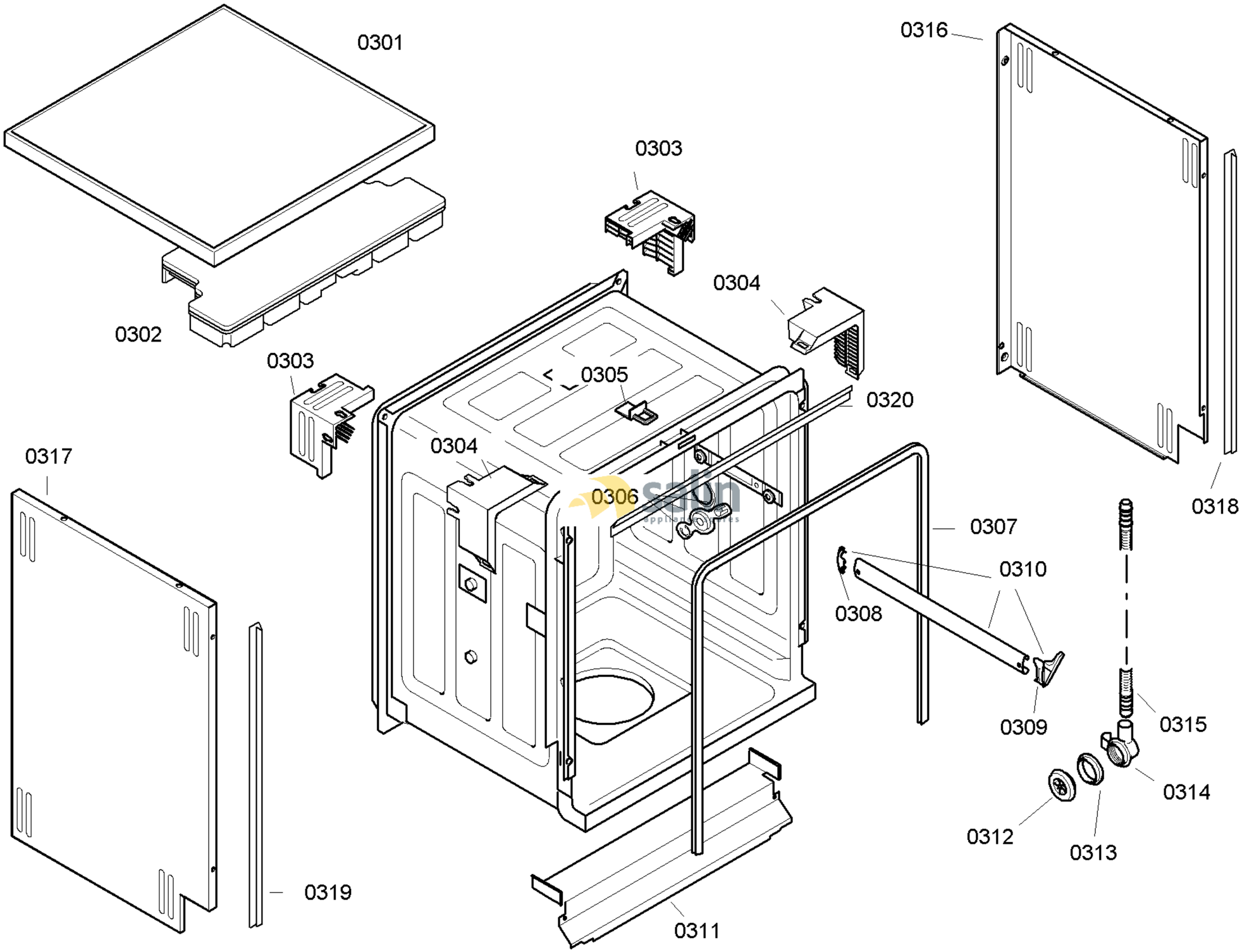

58300000117377 aet 000 b 3/6

FAMILY : SGS45M18II
MODEL NO: SGS45M18II/01
Check Position No/Part No or Replacement No

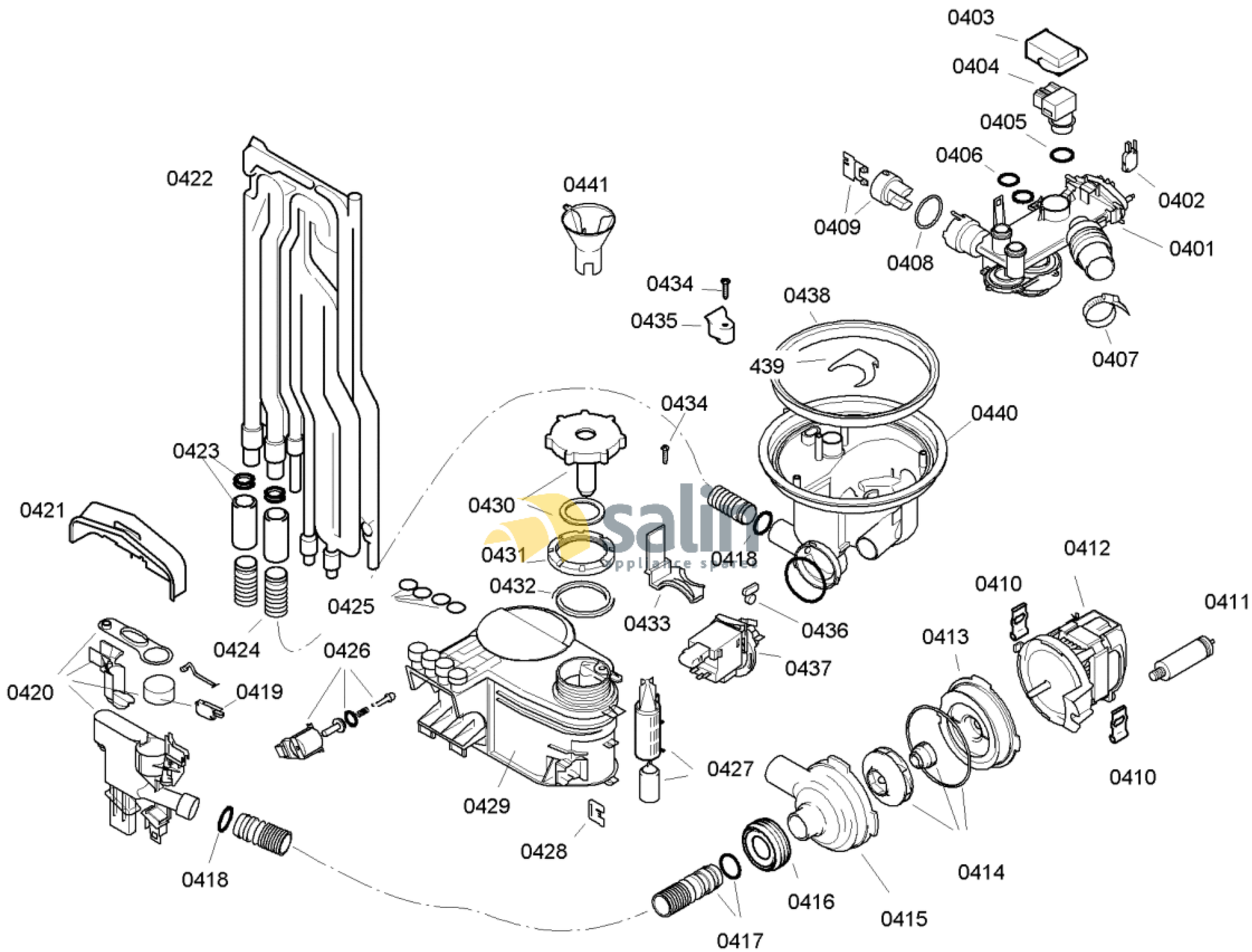

58300000117377 aet 000 b 4/6

FAMILY : SGS45M18II

MODEL NO: SGS45M18II/01

Check Position No/Part No or Replacement No

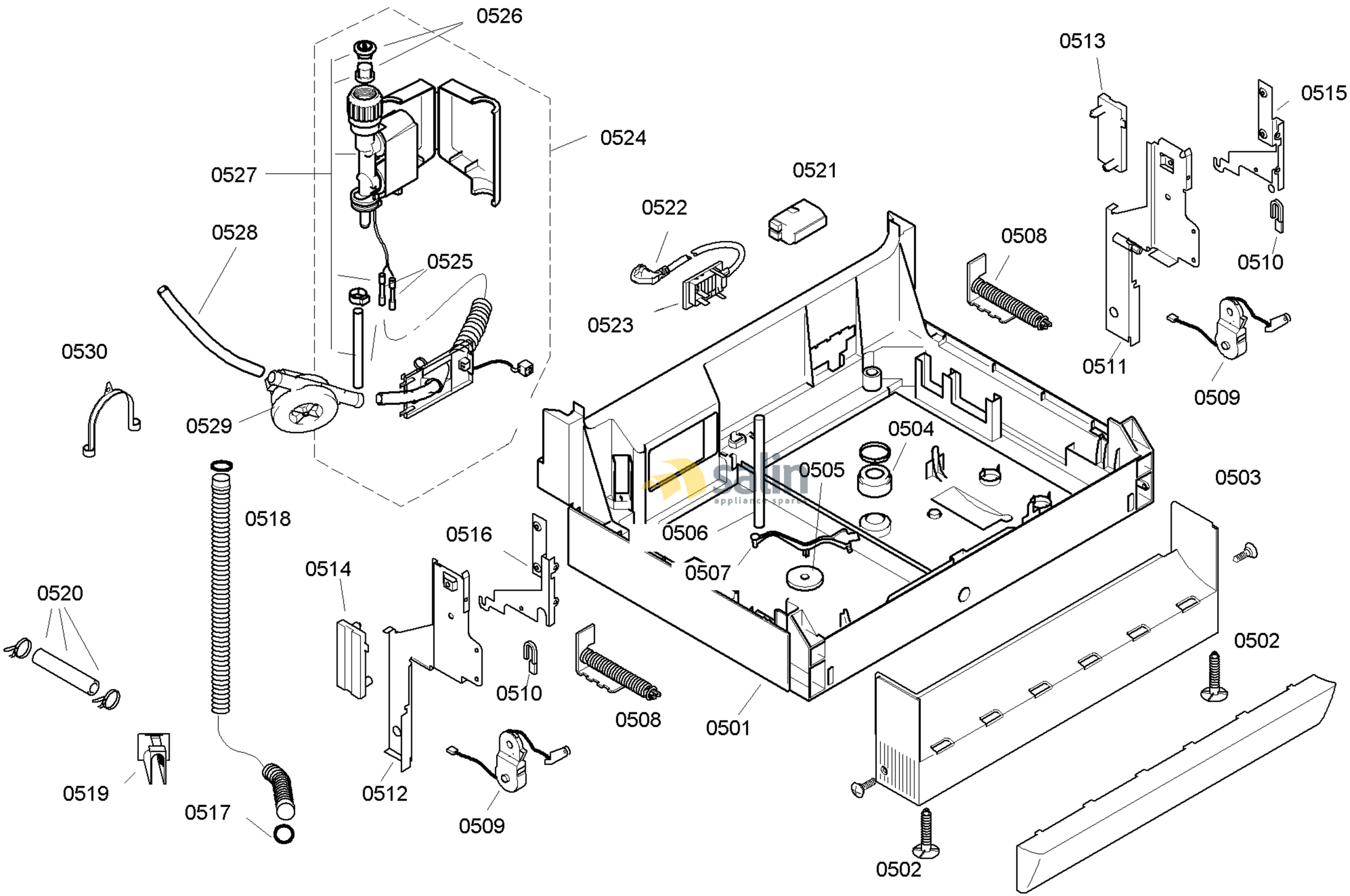

58300000117377 aet 000 b 5/6

FAMILY : SGS45M18II
MODEL NO: SGS45M18II/01
Check Position No/Part No or Replacement No

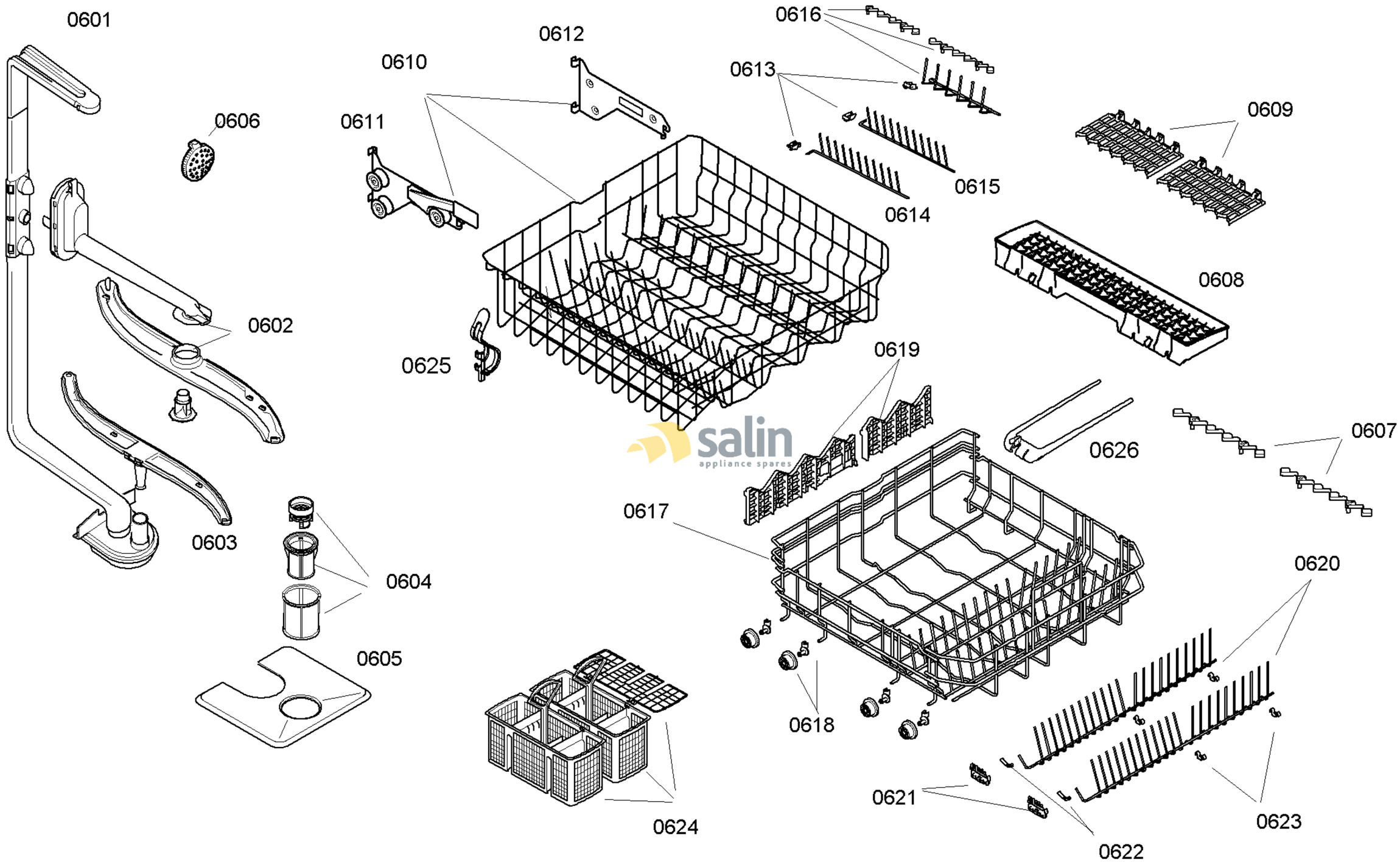

58300000117377 aet 000 b 6/6

FAMILY : SGS45M18II
MODEL NO: SGS45M18II/01
Check Position No/Part No or Replacement No