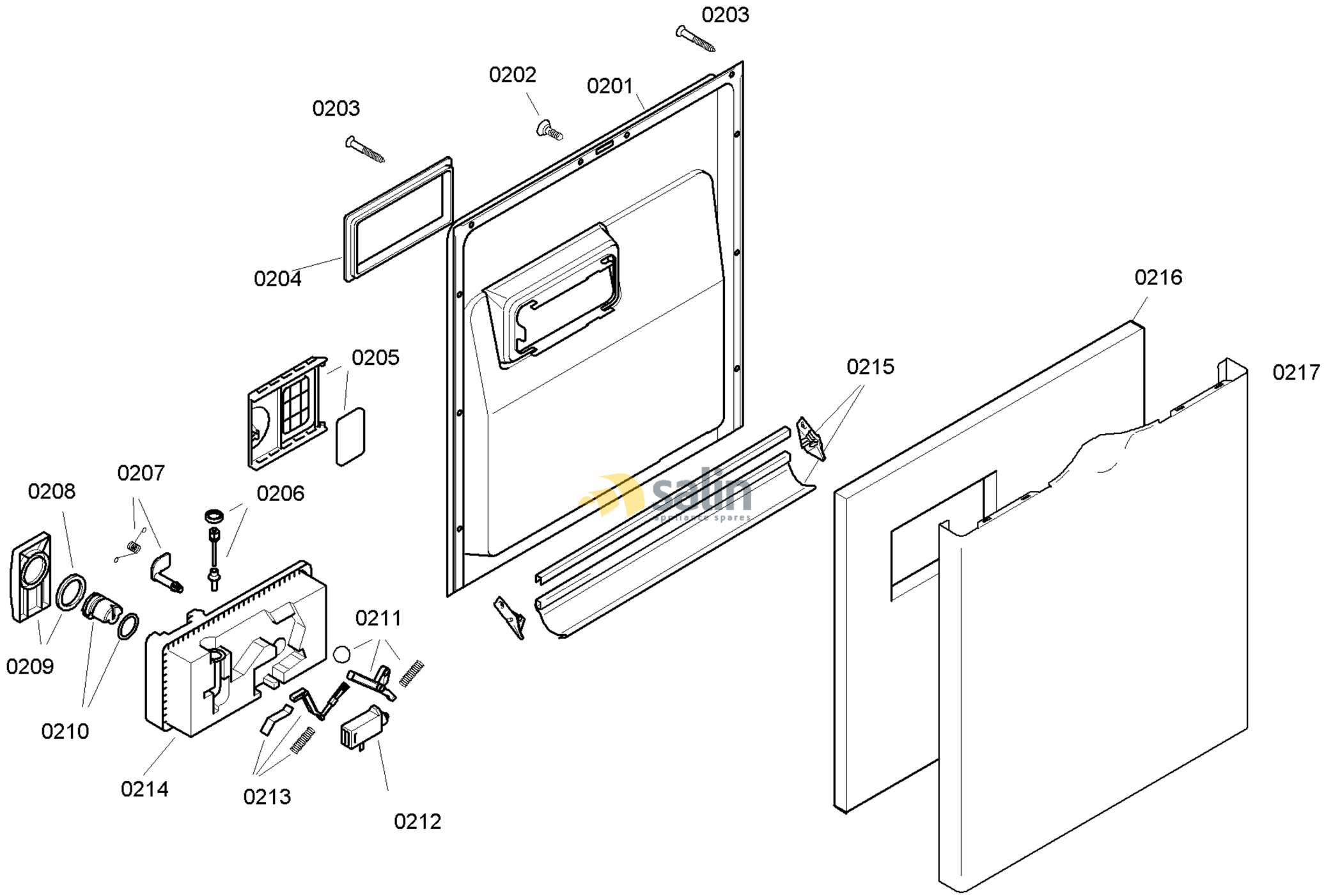

58300000119294 aet 000 b 2/6

FAMILY : SGS45M38EU
MODEL NO: SGS45M38EU/75
Check Position No/Part No or Replacement No

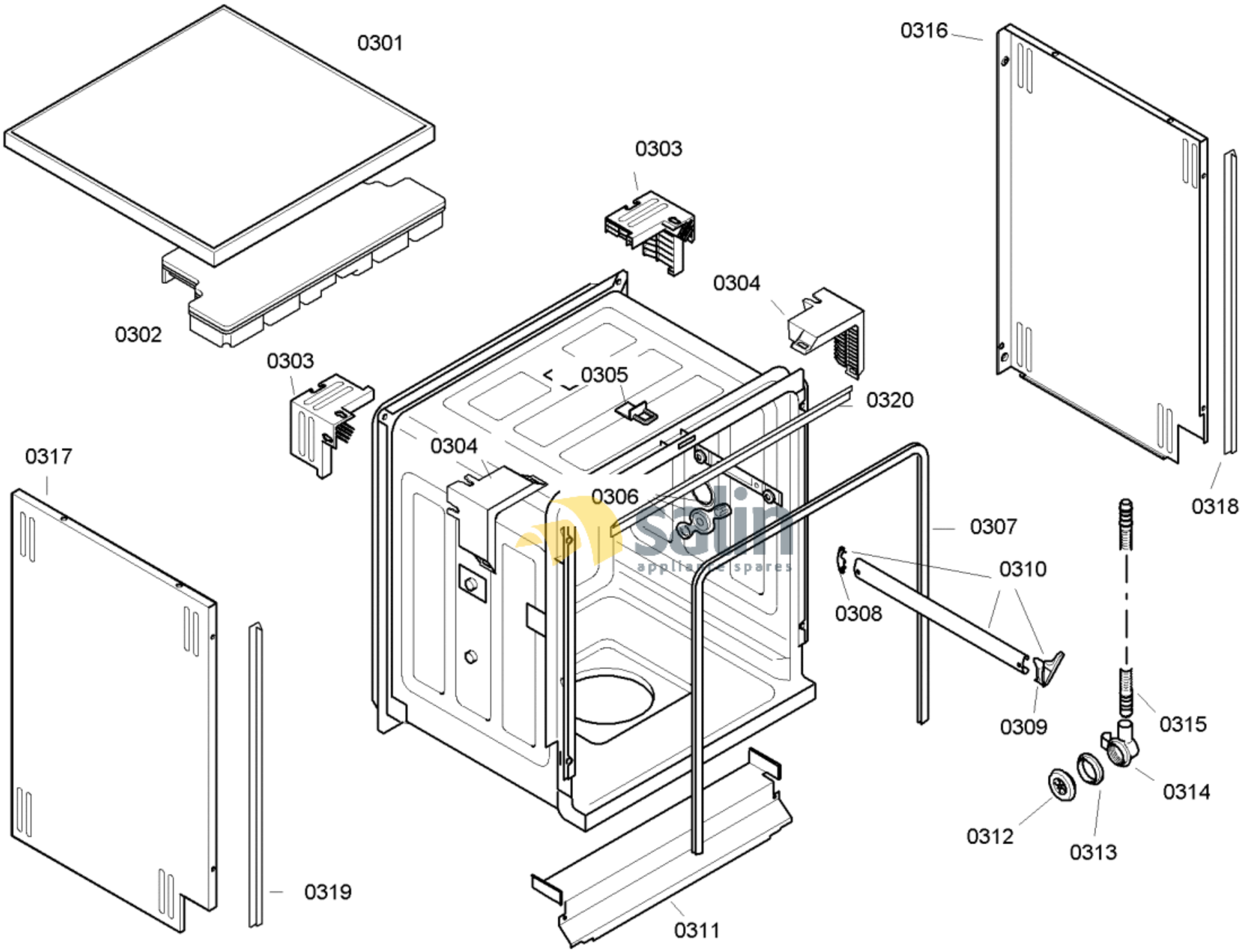

58300000119294 aet 000 b 3/6

FAMILY : SGS45M38EU

MODEL NO: SGS45M38EU/75

Check Position No/Part No or Replacement No

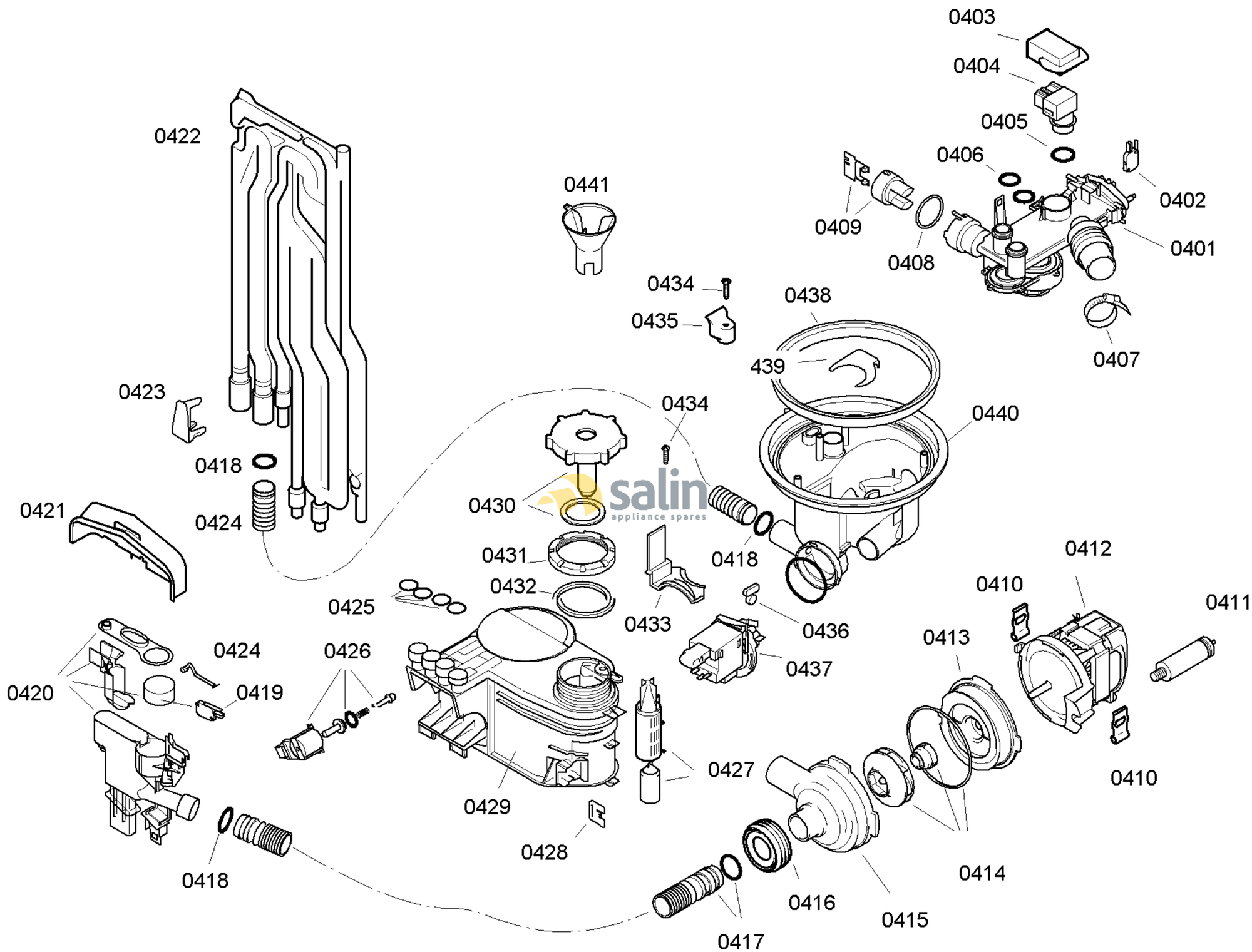

58300000119294 aet 000 b 4/6

FAMILY : SGS45M38EU
MODEL NO: SGS45M38EU/75
Check Position No/Part No or Replacement No

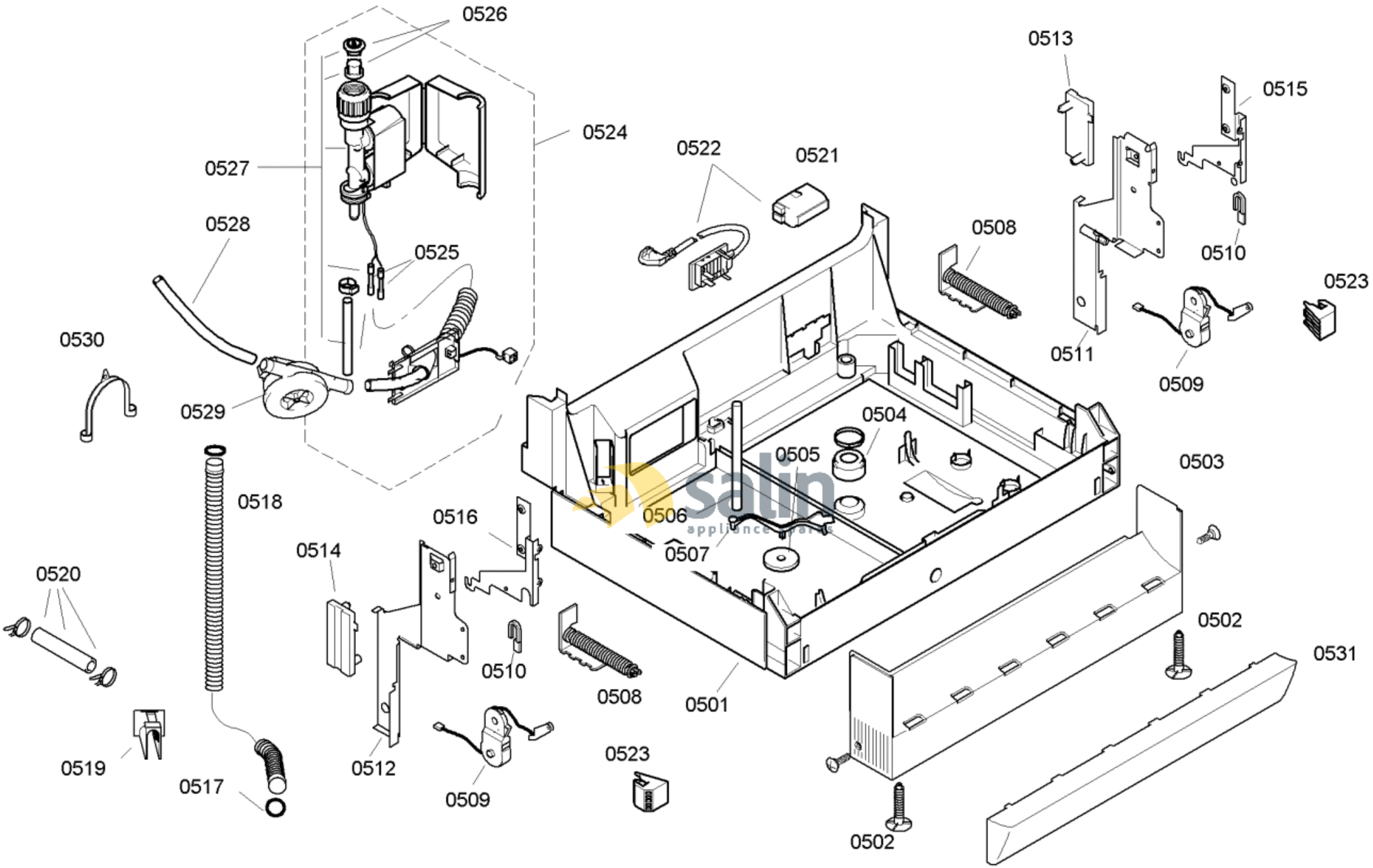

58300000119294 aet 000 b 5/6

FAMILY : SGS45M38EU

MODEL NO: SGS45M38EU/75

Check Position No/Part No or Replacement No

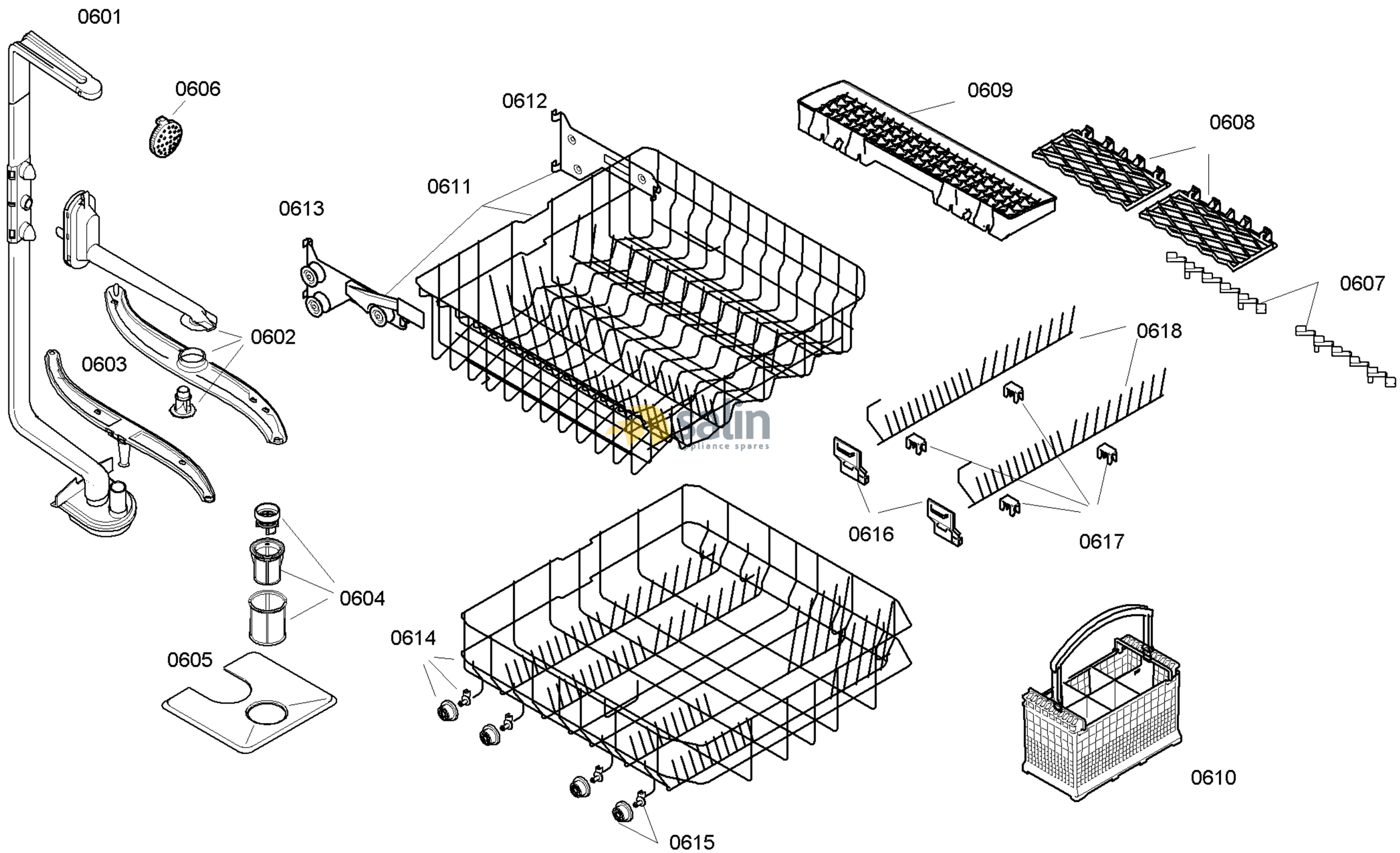

58300000119294 aet 000 b 6/6

FAMILY : SGS45M38EU
MODEL NO: SGS45M38EU/75
Check Position No/Part No or Replacement No