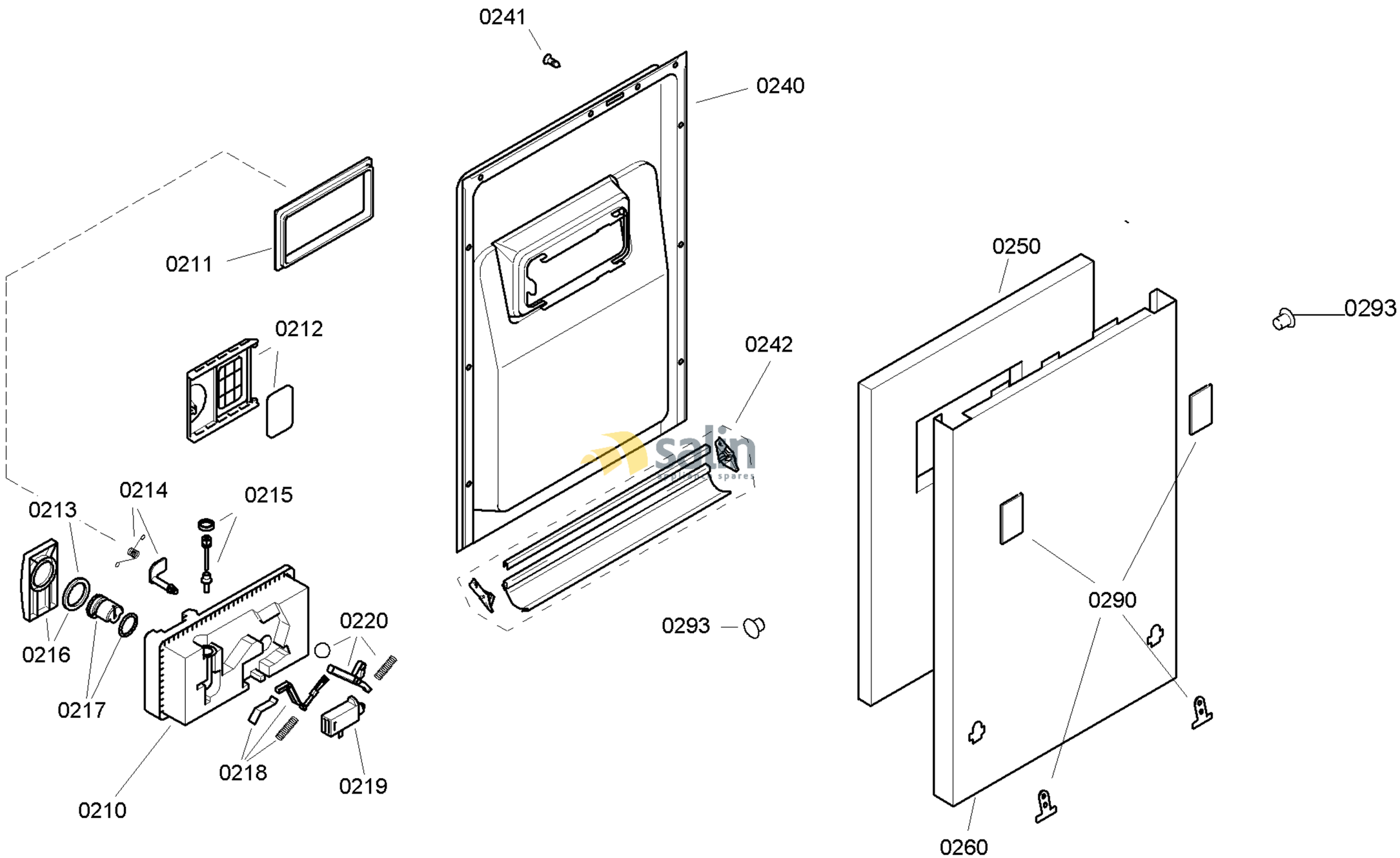

58300000138266 aet 000 a 2/6

FAMILY : SRV53M03SK
MODEL NO: SRV53M03SK/01
Check Position No/Part No or Replacement No

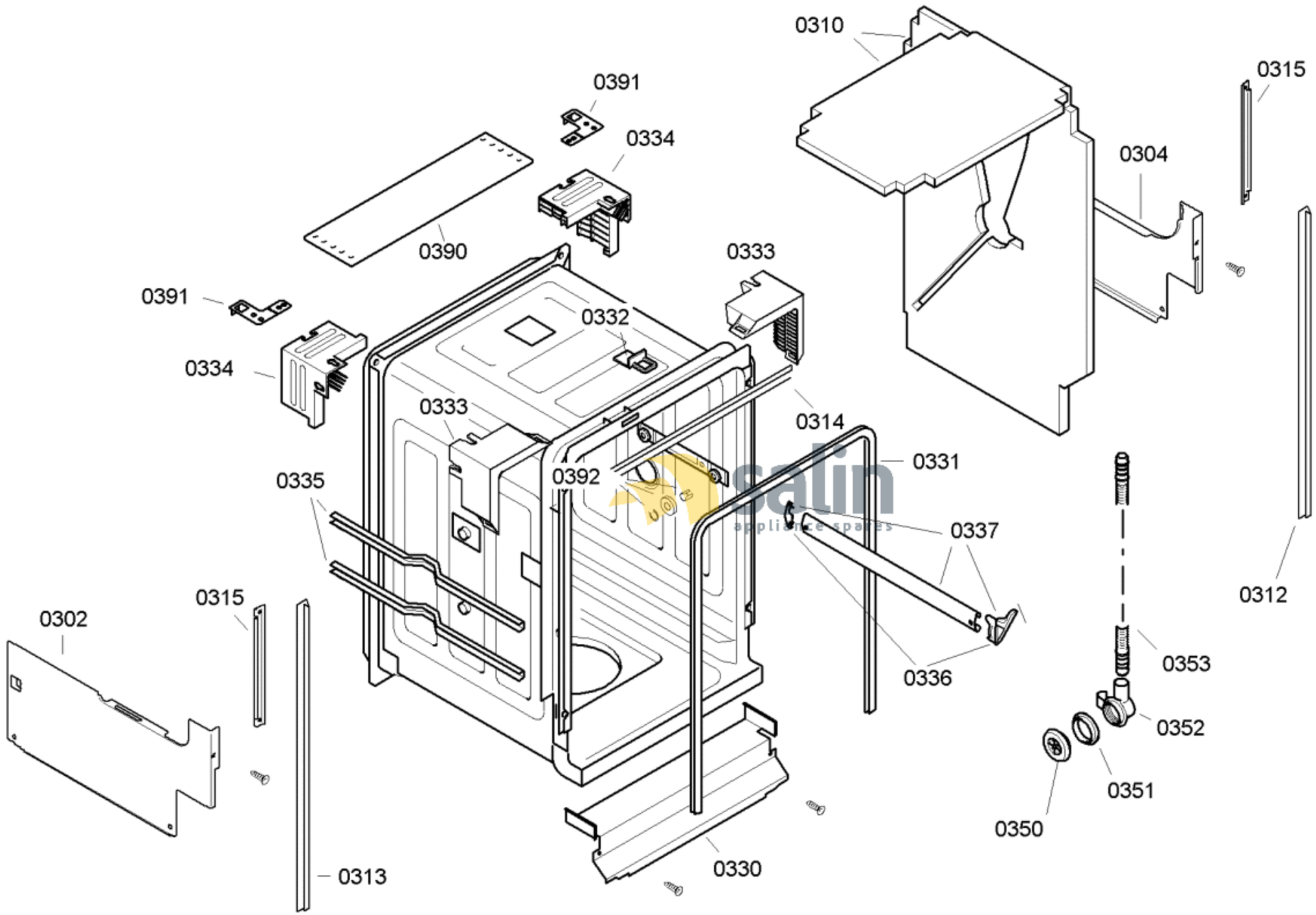

58300000138266 aet 000 a 3/6

FAMILY : SRV53M03SK

MODEL NO: SRV53M03SK/01

Check Position No/Part No or Replacement No

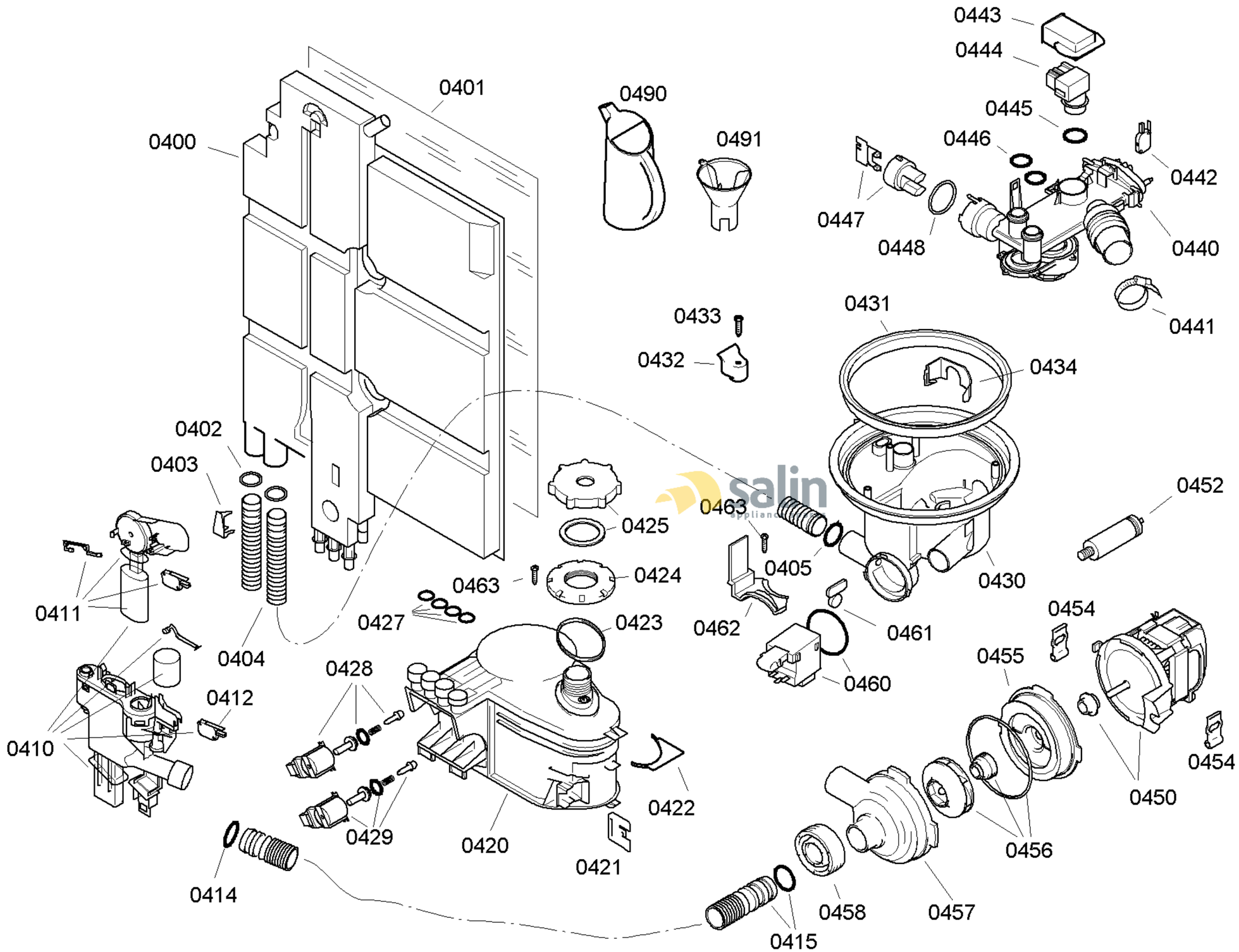

58300000138266 aet 000 a 4/6

FAMILY : SRV53M03SK
MODEL NO: SRV53M03SK/01
Check Position No/Part No or Replacement No

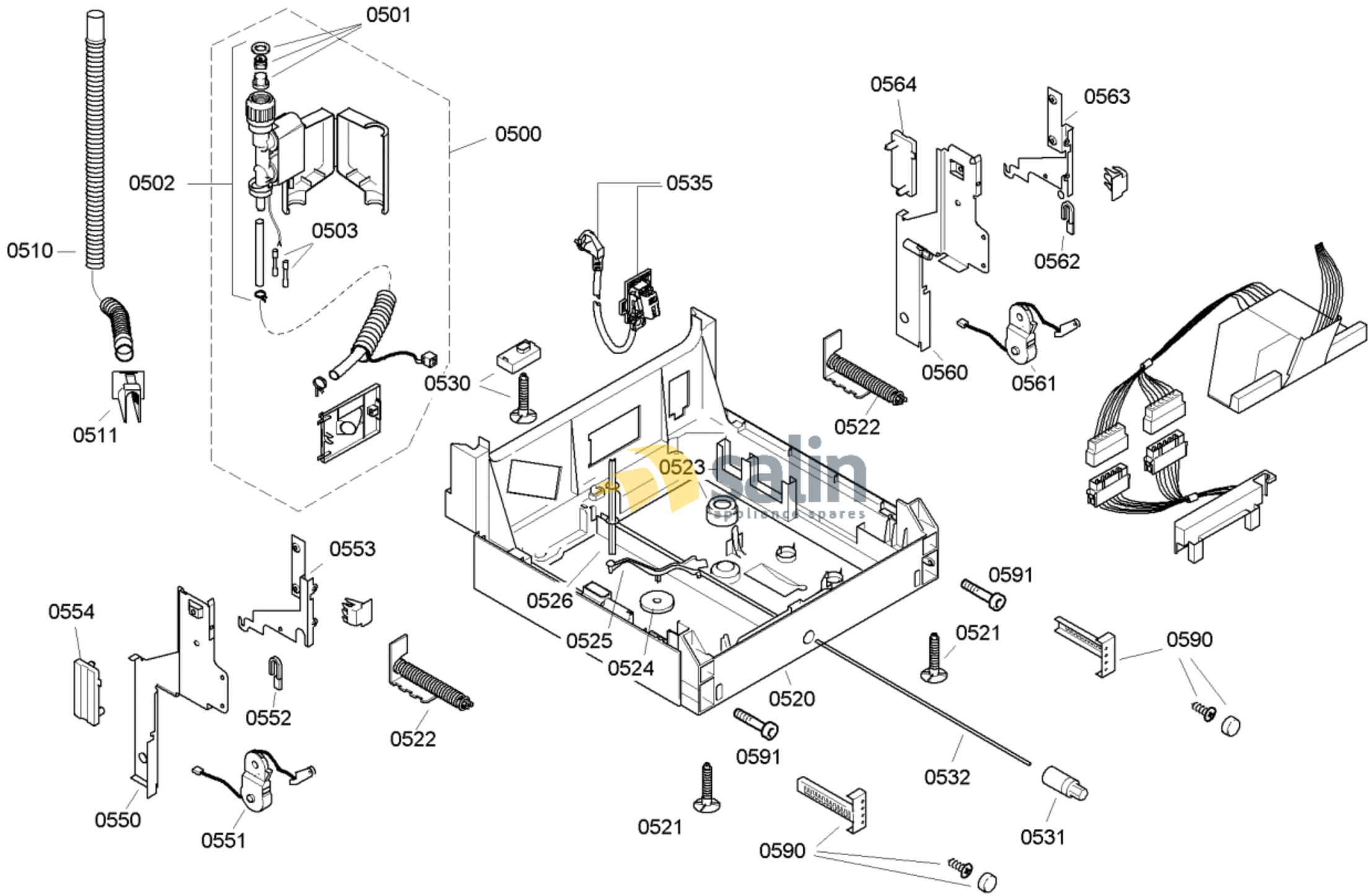

58300000138266 aet 000 a 5/6

FAMILY : SRV53M03SK

MODEL NO: SRV53M03SK/01

Check Position No/Part No or Replacement No

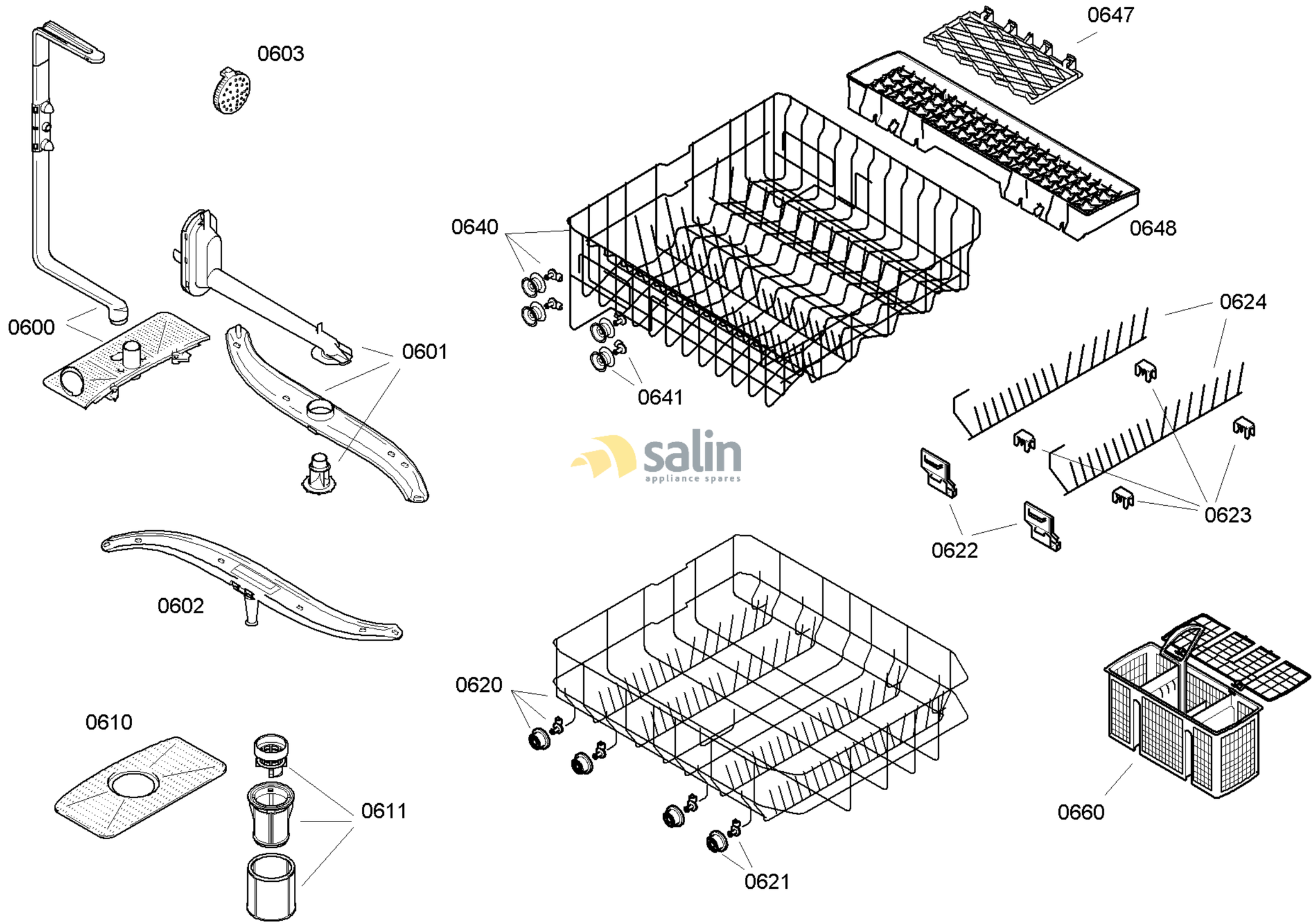

58300000138266 aet 000 a 6/6

FAMILY : SRV53M03SK
MODEL NO: SRV53M03SK/01
Check Position No/Part No or Replacement No