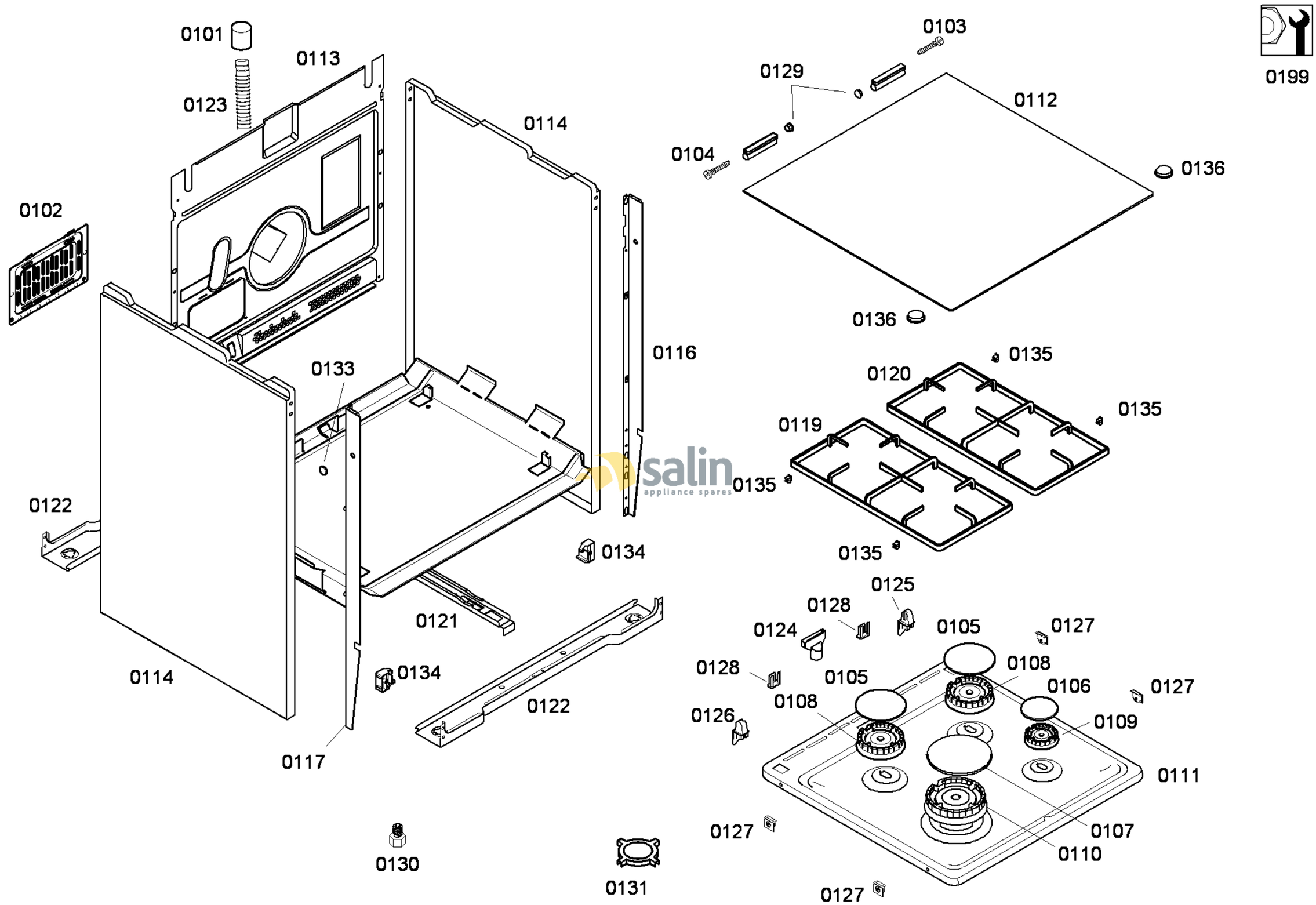

58300000146769 aet 000 a 1/5

FAMILY : HGV525120T
MODEL NO: HGV525120T/04
Check Position No/Part No or Replacement No

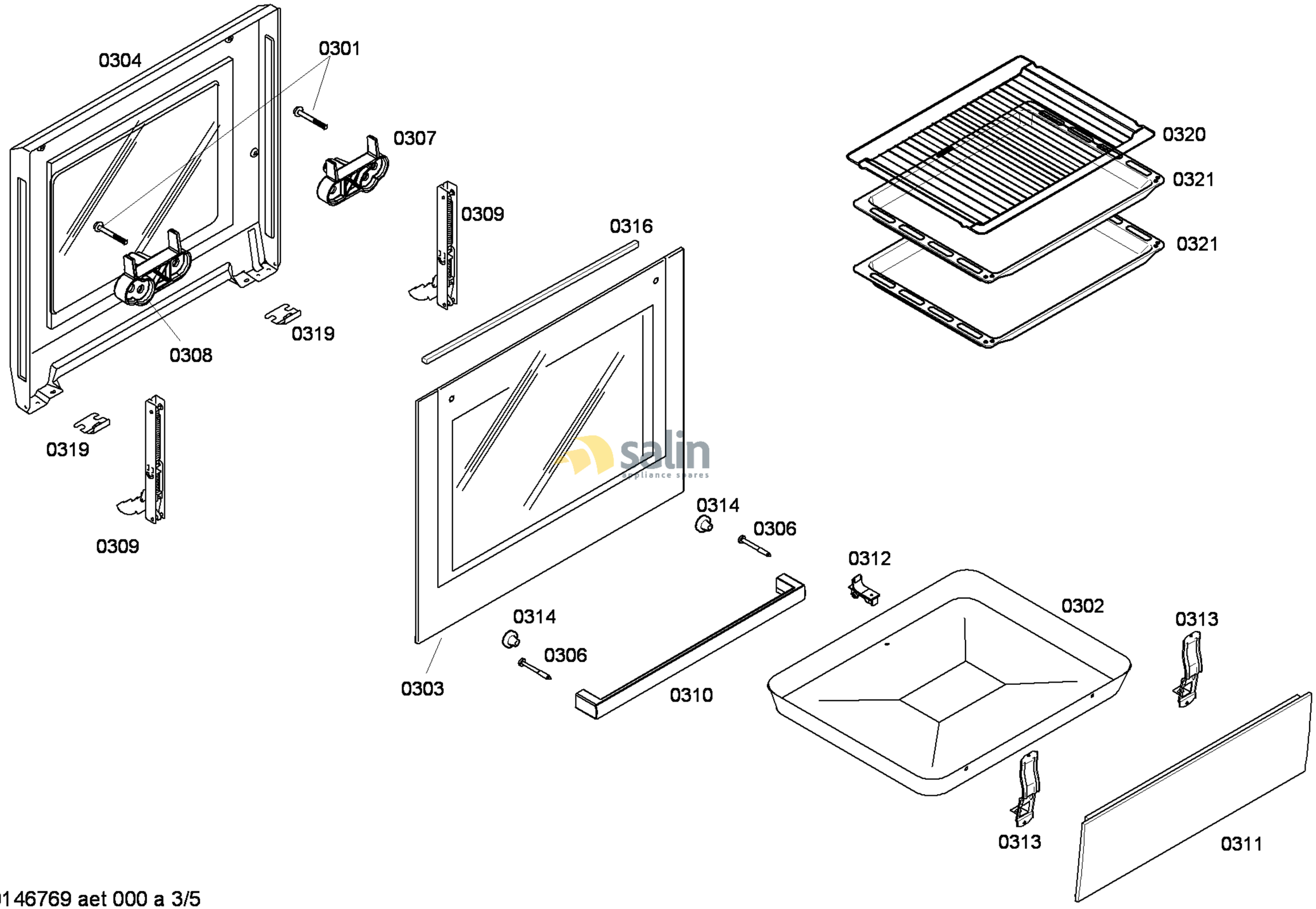

58300000146769 aet 000 a 3/5

FAMILY : HGV525120T
MODEL NO: HGV525120T/04
Check Position No/Part No or Replacement No

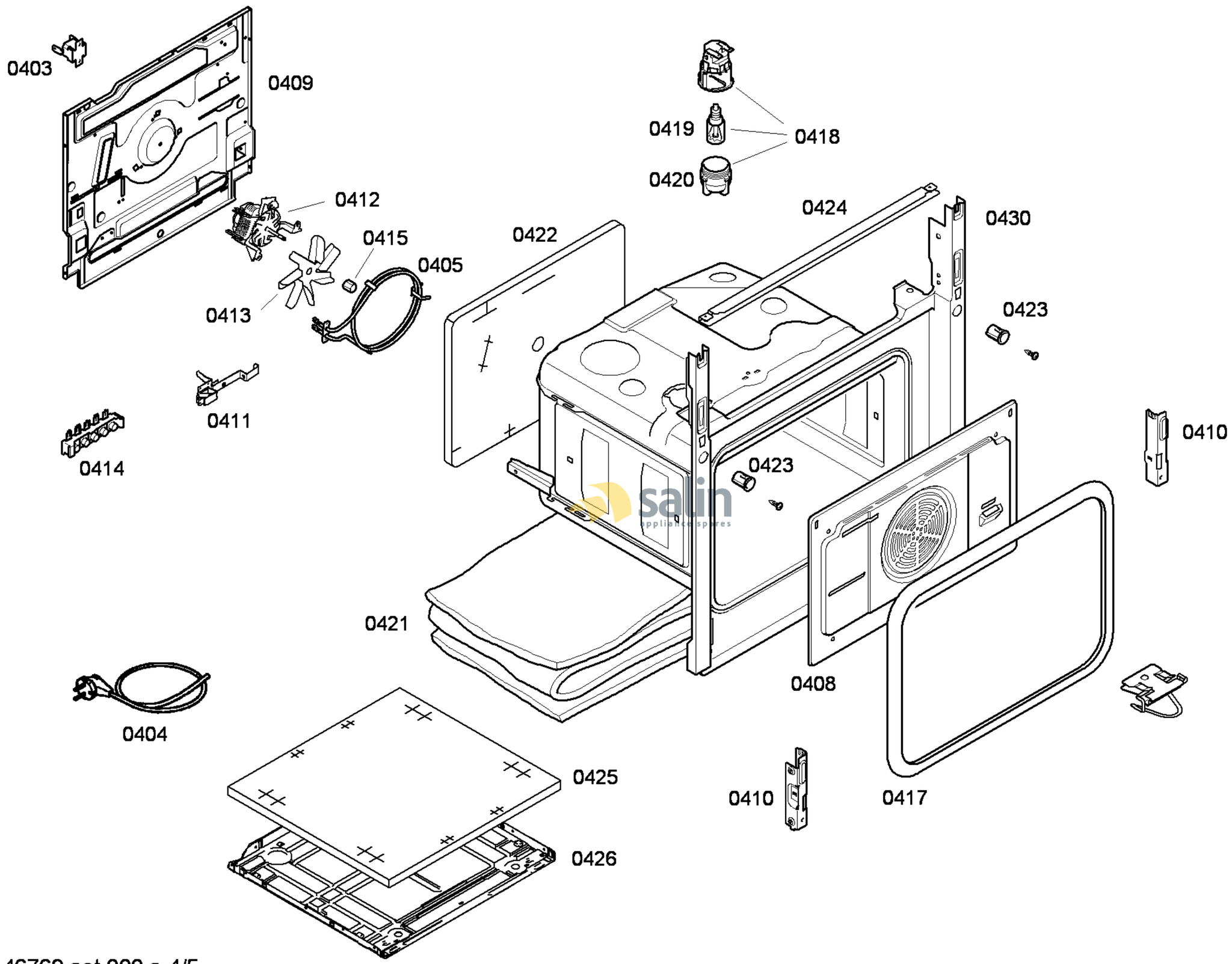

583000001 46769 aet 000 a 4/5

FAMILY : HGV525120T
MODEL NO: HGV525120T/04
Check Position No/Part No or Replacement No

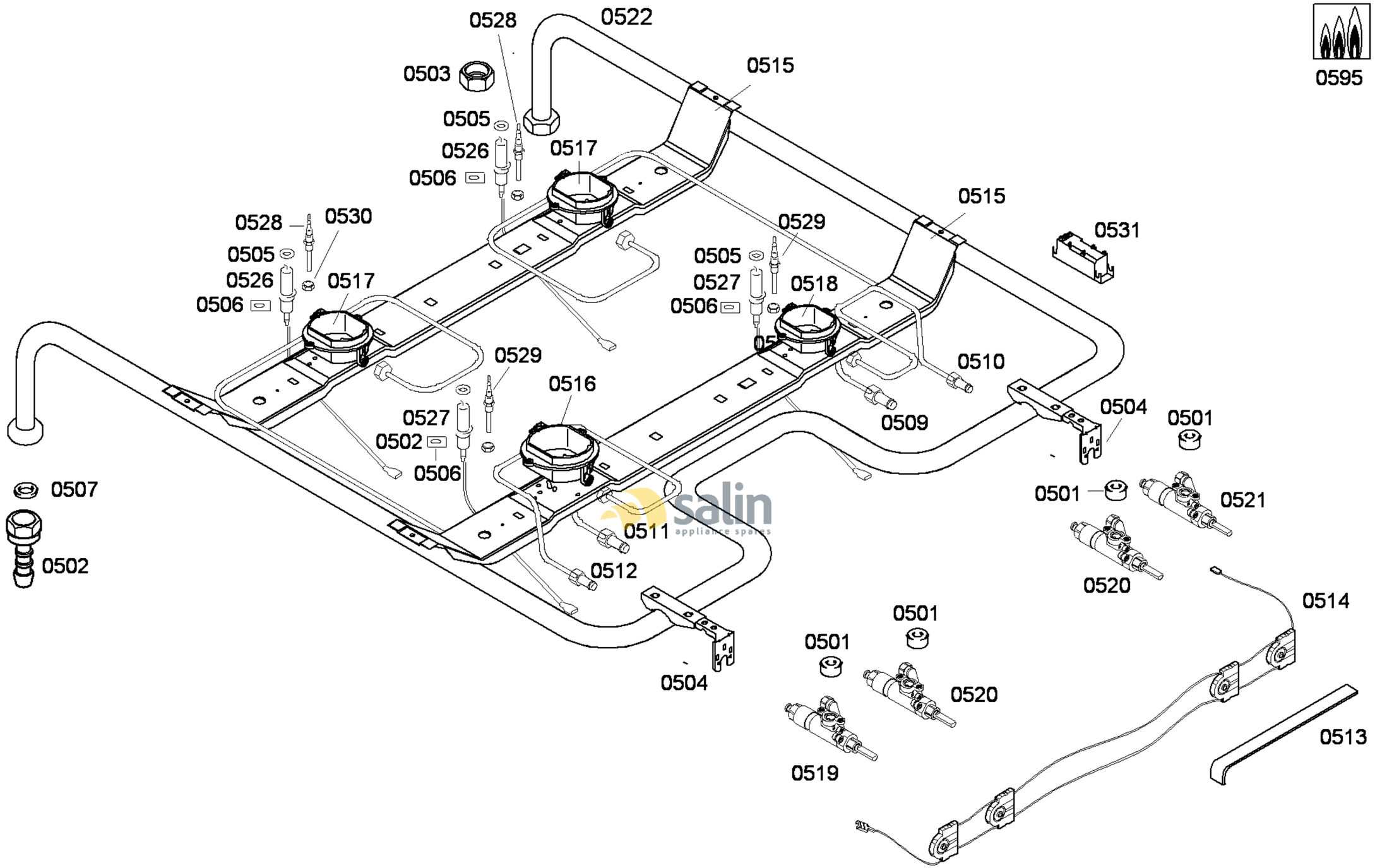

583000001 46769 aet 000 a 5/5

FAMILY : HGV525120T
MODEL NO: HGV525120T/04
Check Position No/Part No or Replacement No