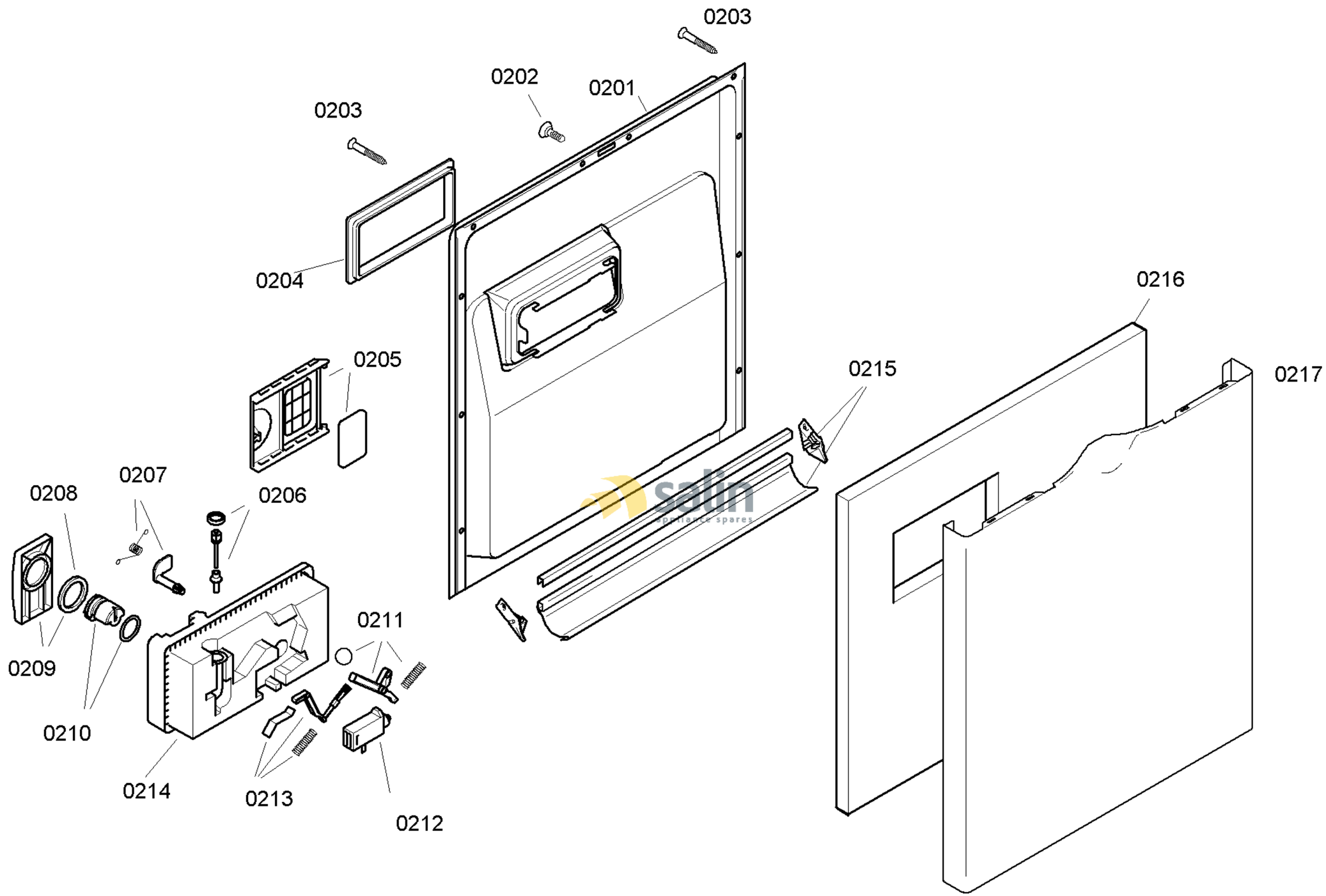

58300000130484 aet 000 a 2/6

FAMILY : SGS45M58EU
MODEL NO: SGS45M58EU/90
Check Position No/Part No or Replacement No

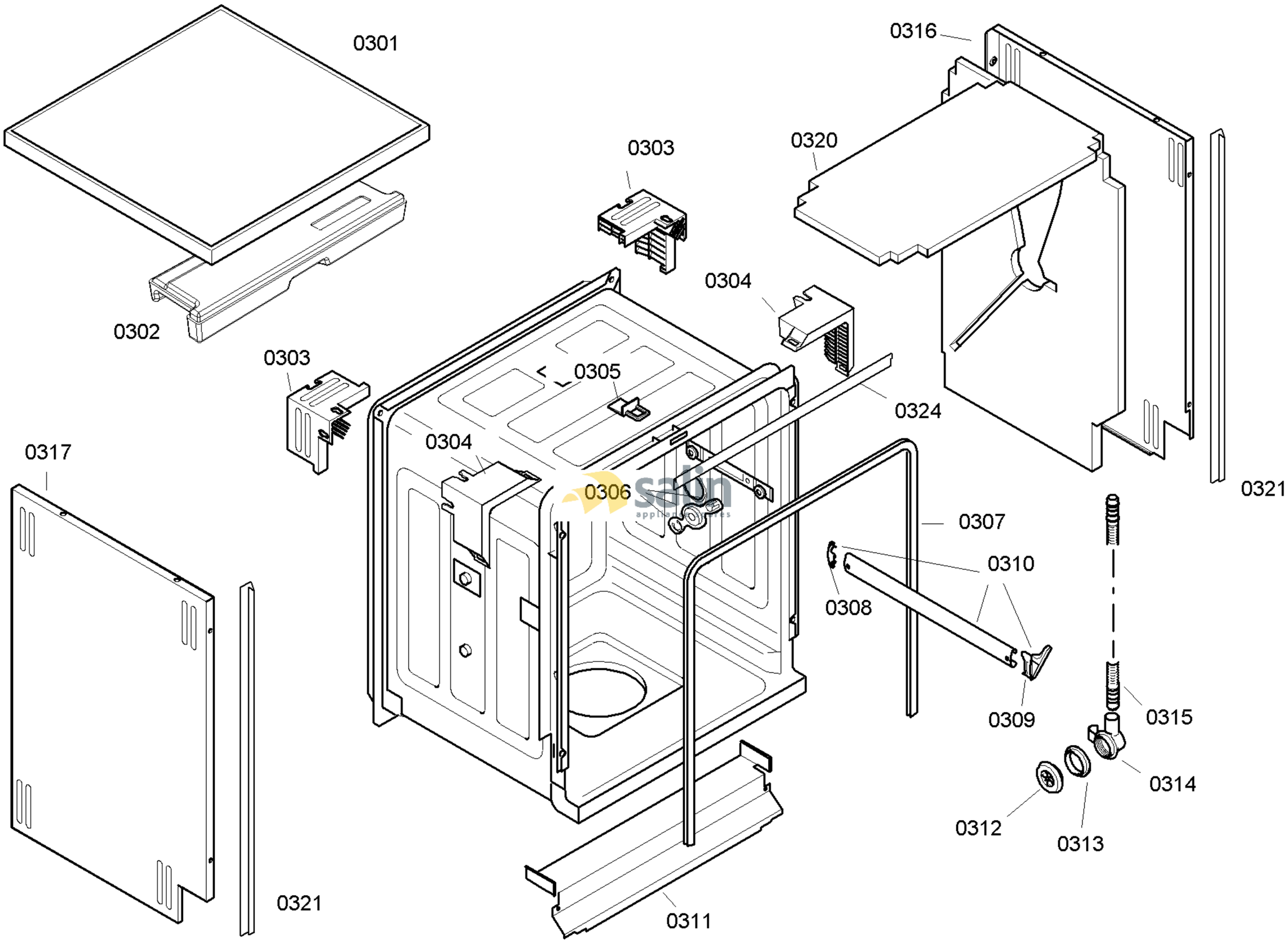

58300000130484 aet 000 a 3/6

FAMILY : SGS45M58EU
MODEL NO: SGS45M58EU/90
Check Position No/Part No or Replacement No

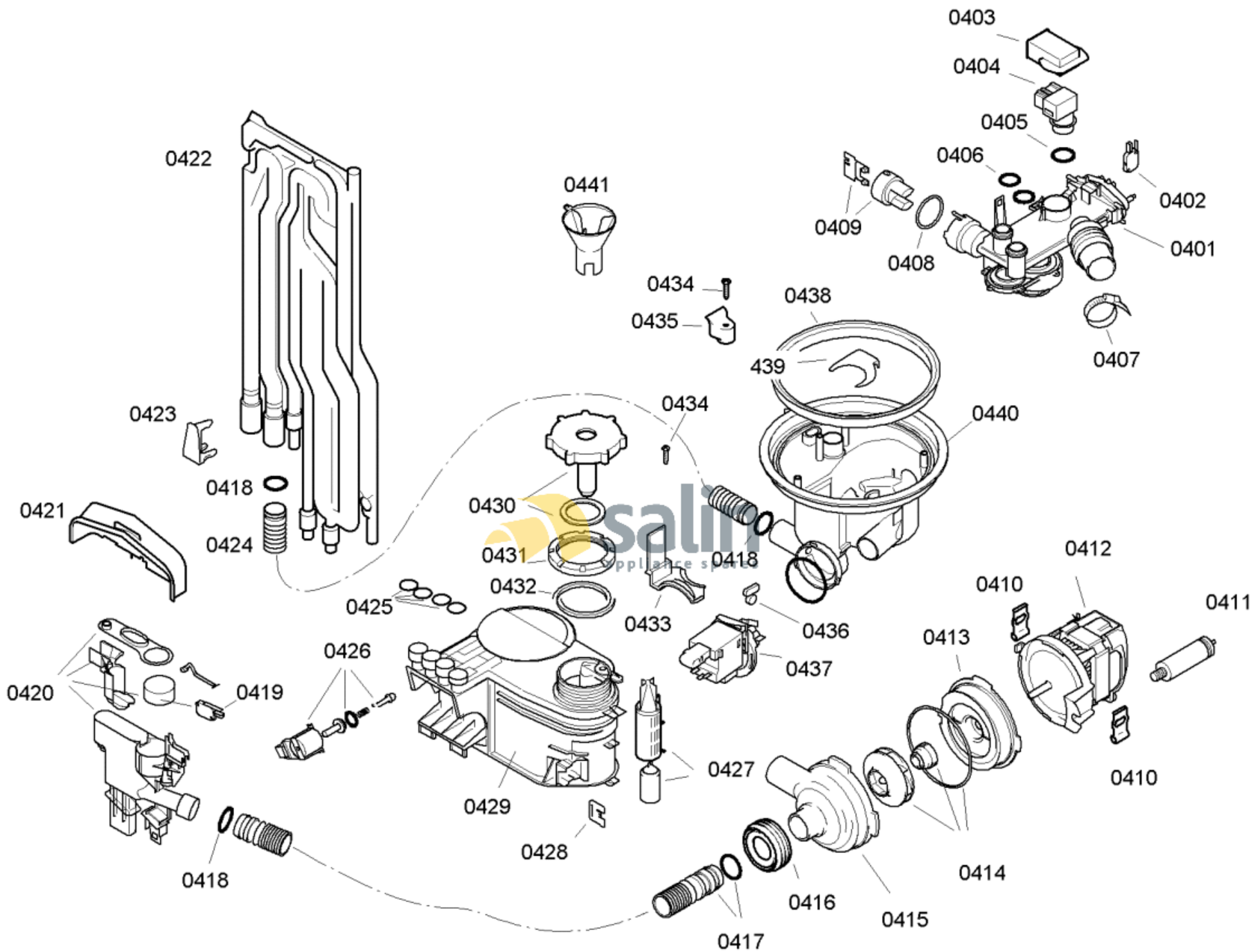

58300000130484 aet 000 a 4/6

FAMILY : SGS45M58EU

MODEL NO: SGS45M58EU/90

Check Position No/Part No or Replacement No

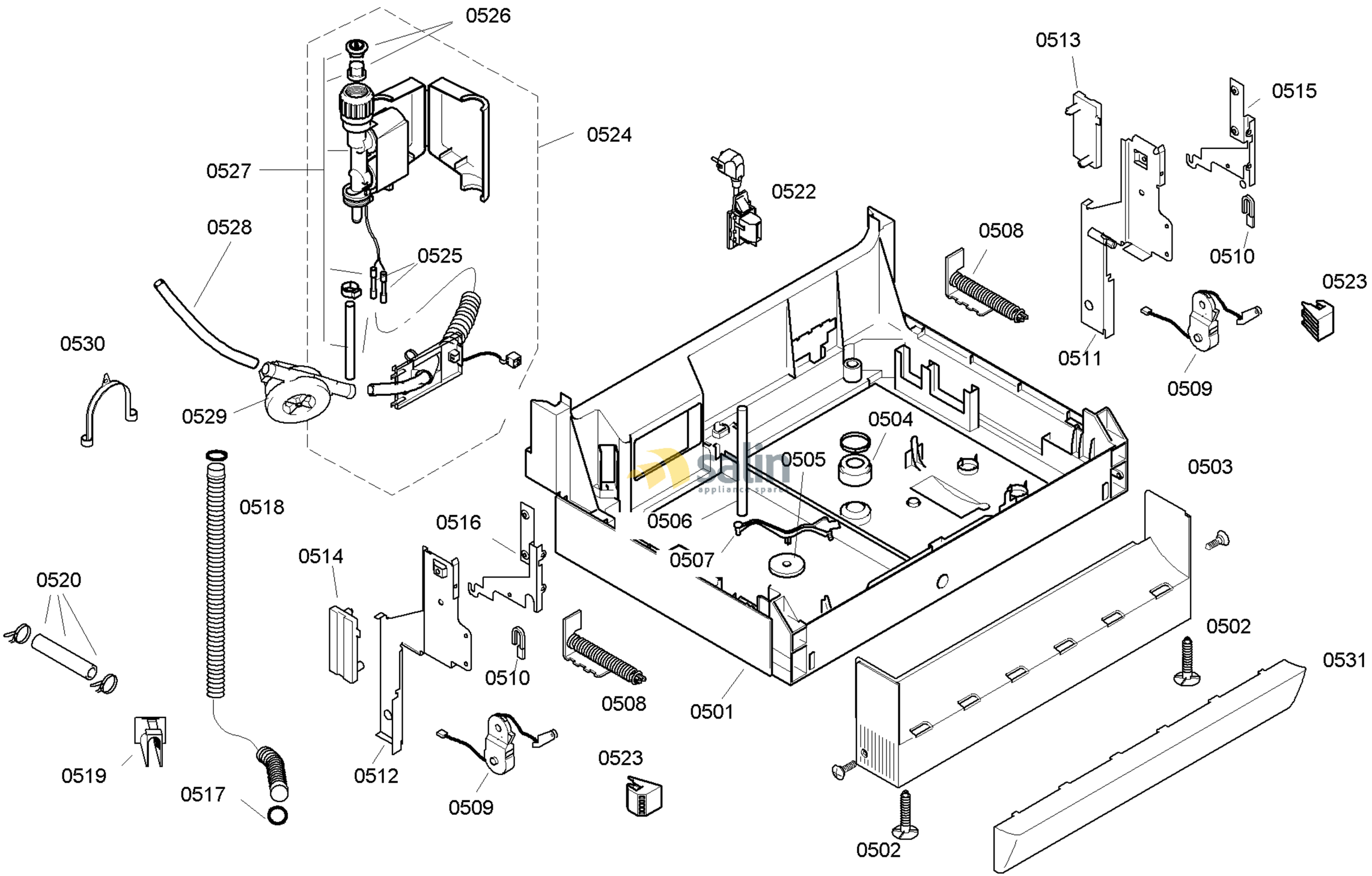

58300000130484 aet 000 a 5/6

FAMILY : SGS45M58EU
MODEL NO: SGS45M58EU/90
Check Position No/Part No or Replacement No

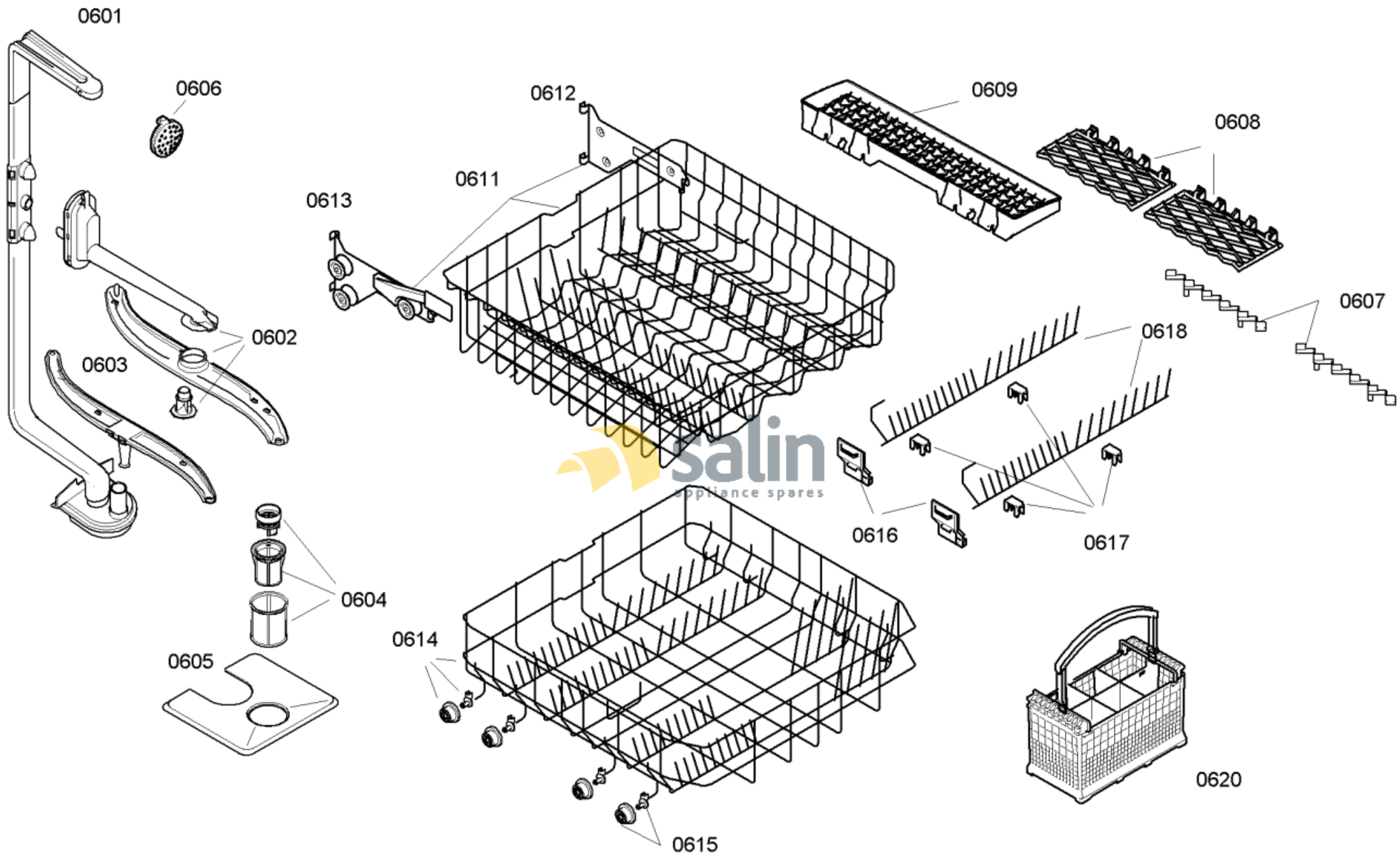

58300000130484 aet 000 a 6/6

FAMILY : SGS45M58EU

MODEL NO: SGS45M58EU/90

Check Position No/Part No or Replacement No