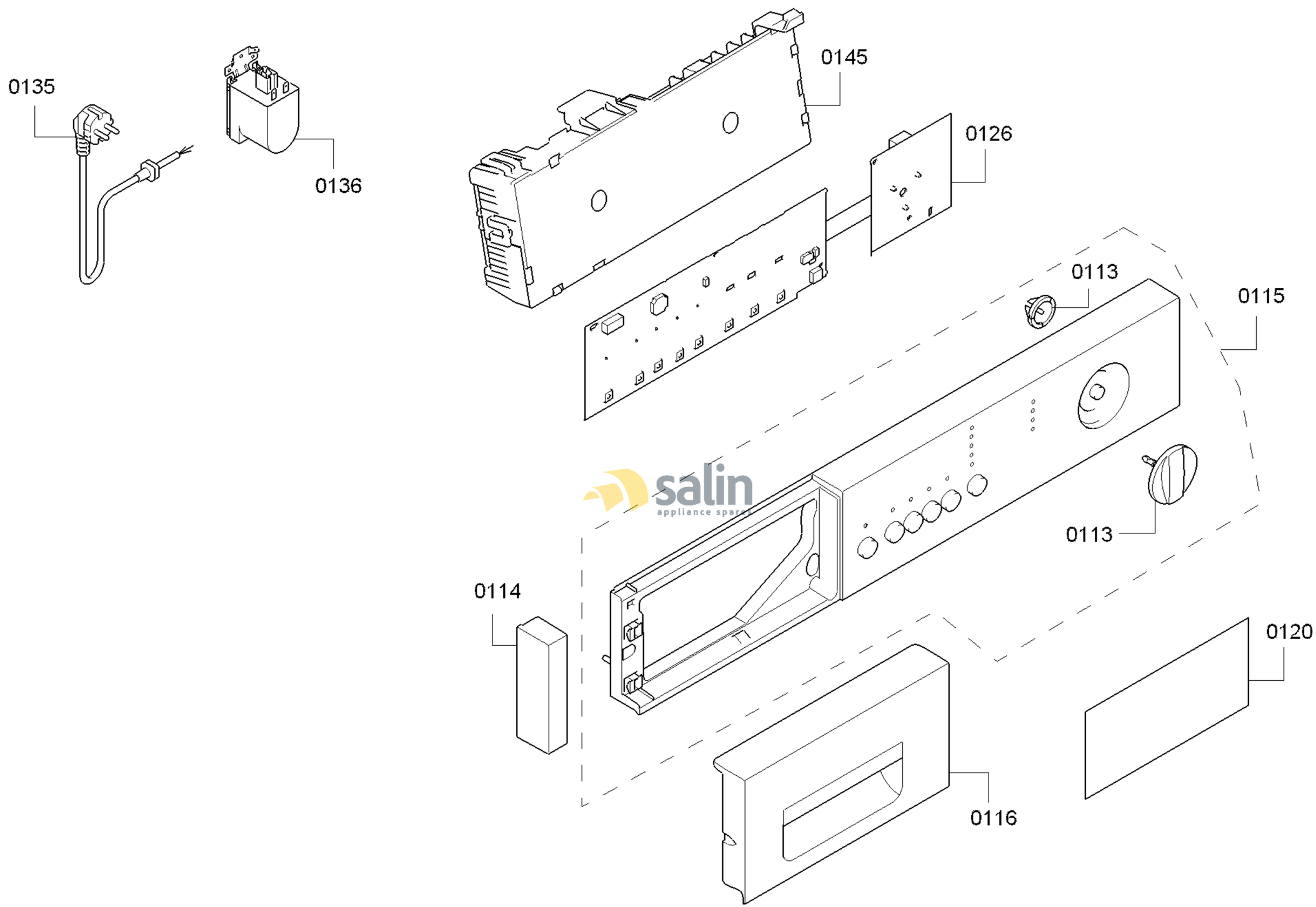

58300000168601 aet 000 a 1/5

FAMILY : WIS24120FF
MODEL NO: WIS24120FF/32
Check Position No/Part No or Replacement No

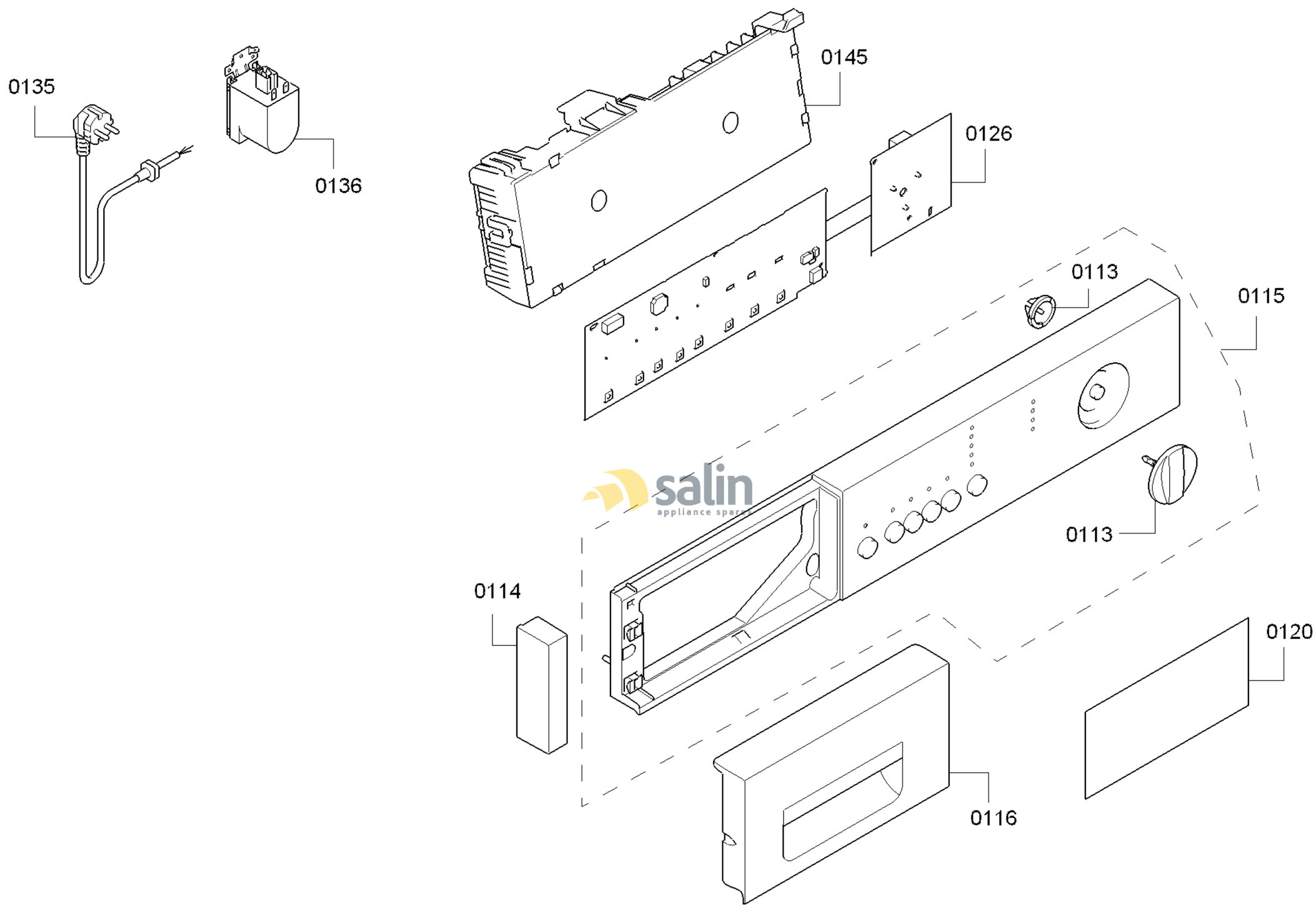

58300000168601 aet 000 a 1/5

FAMILY : WIS24120FF
MODEL NO: WIS24120FF/32
Check Position No/Part No or Replacement No

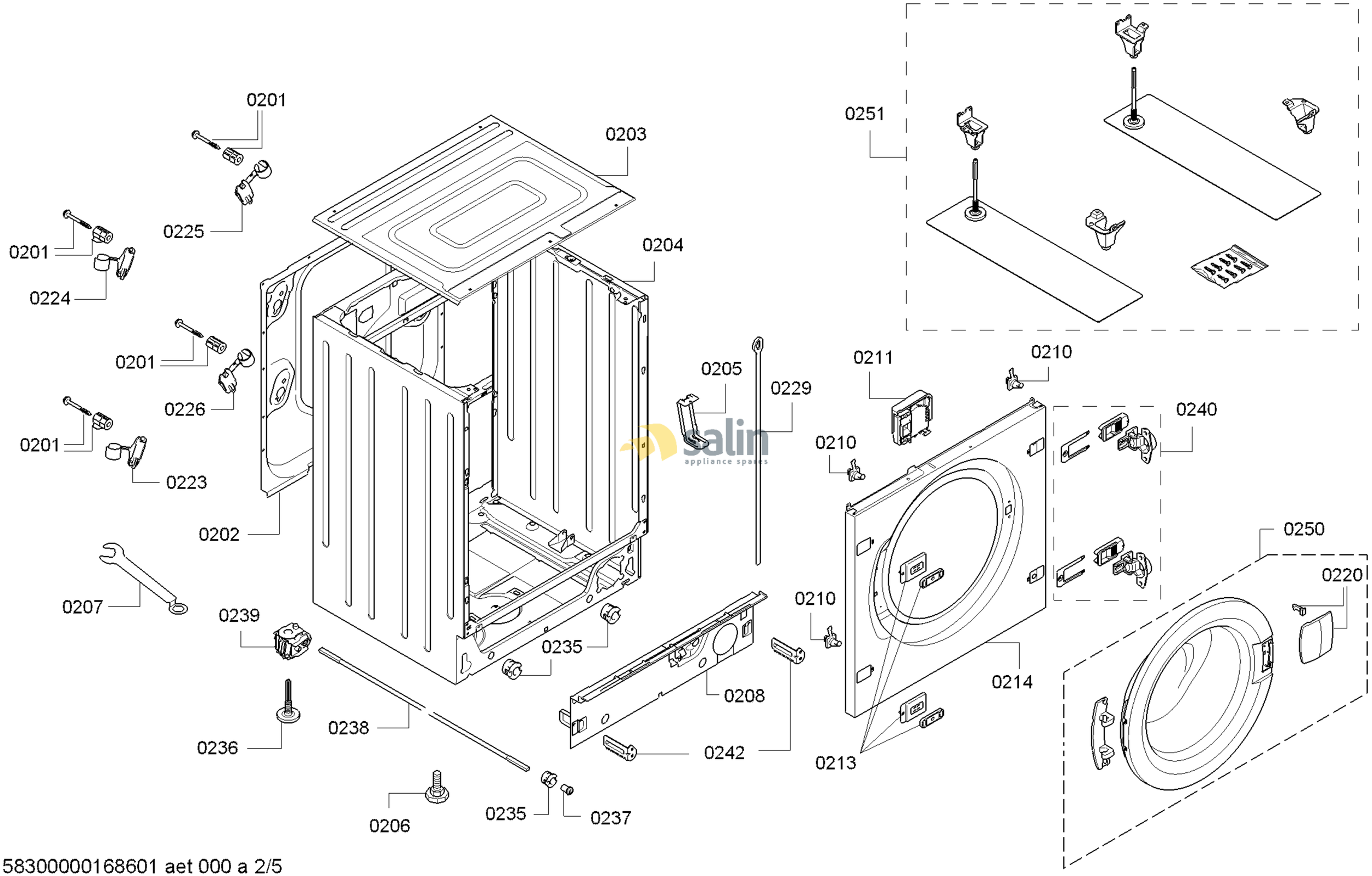

58300000168601 aet 000 a 2/5

FAMILY : WIS24120FF
MODEL NO: WIS24120FF/32
Check Position No/Part No or Replacement No

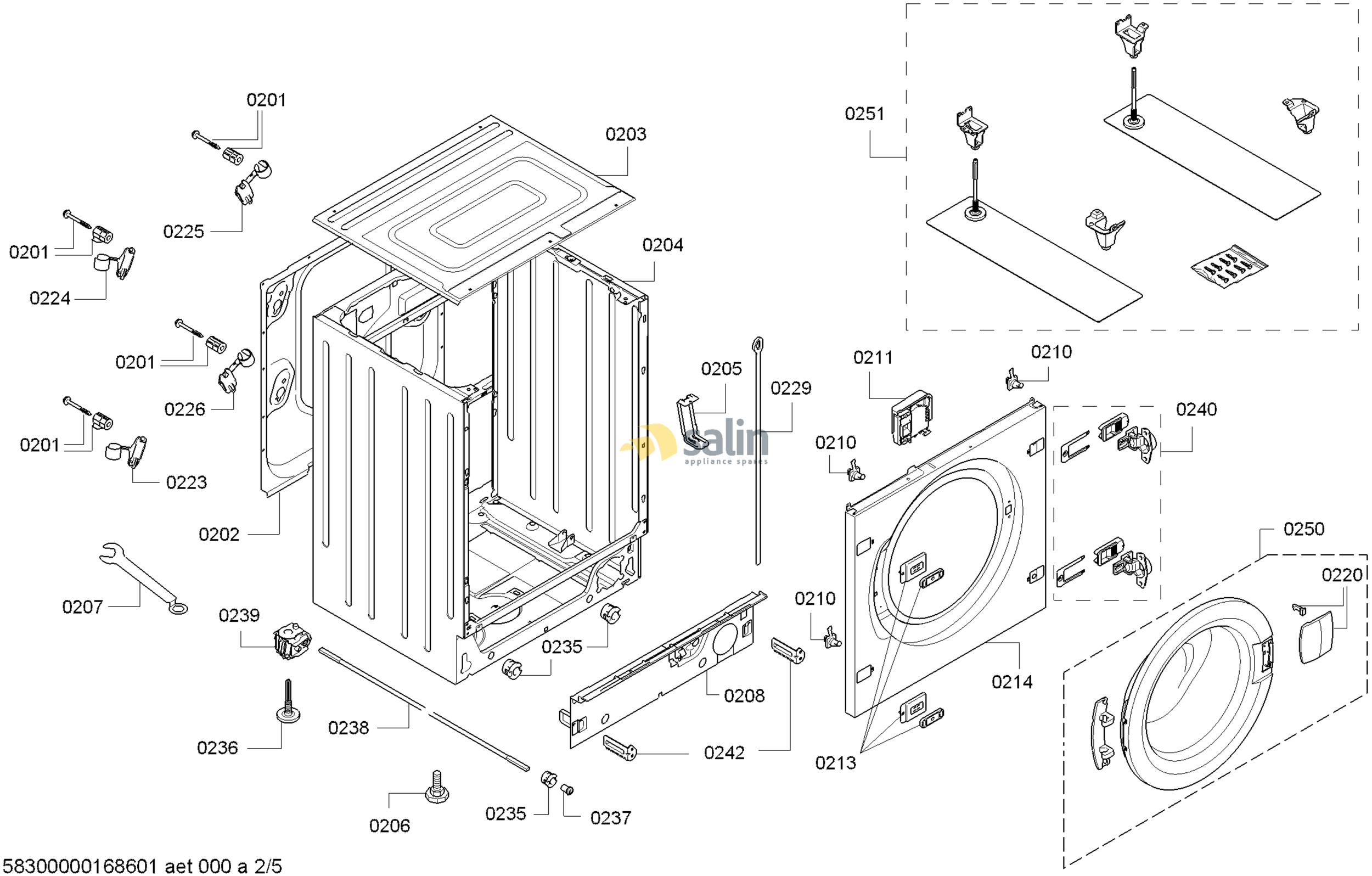

58300000168601 aet 000 a 2/5

FAMILY : WIS24120FF
MODEL NO: WIS24120FF/32
Check Position No/Part No or Replacement No

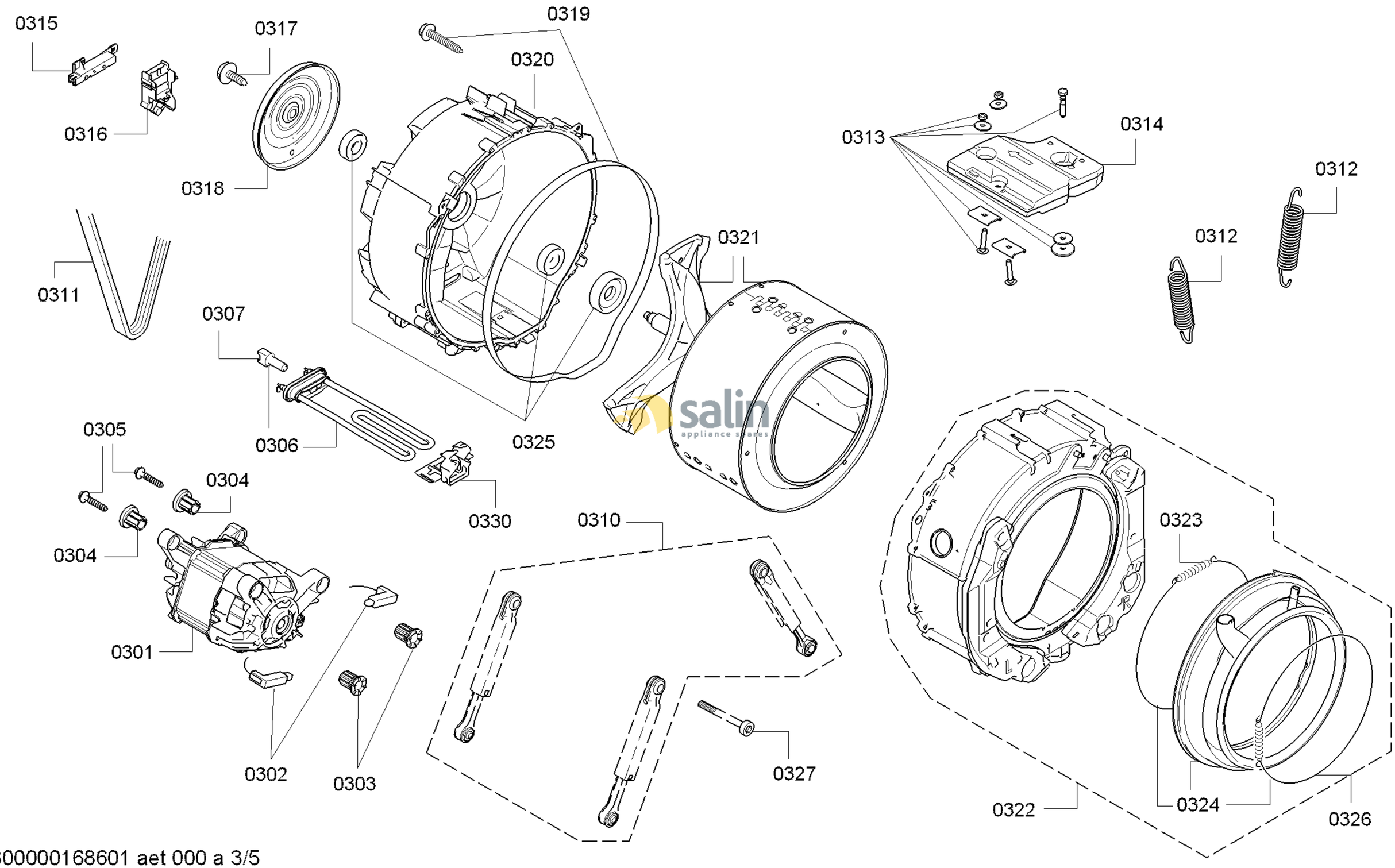

58300000168601 aet 000 a 3/5

FAMILY : WIS24120FF
MODEL NO: WIS24120FF/32
Check Position No/Part No or Replacement No

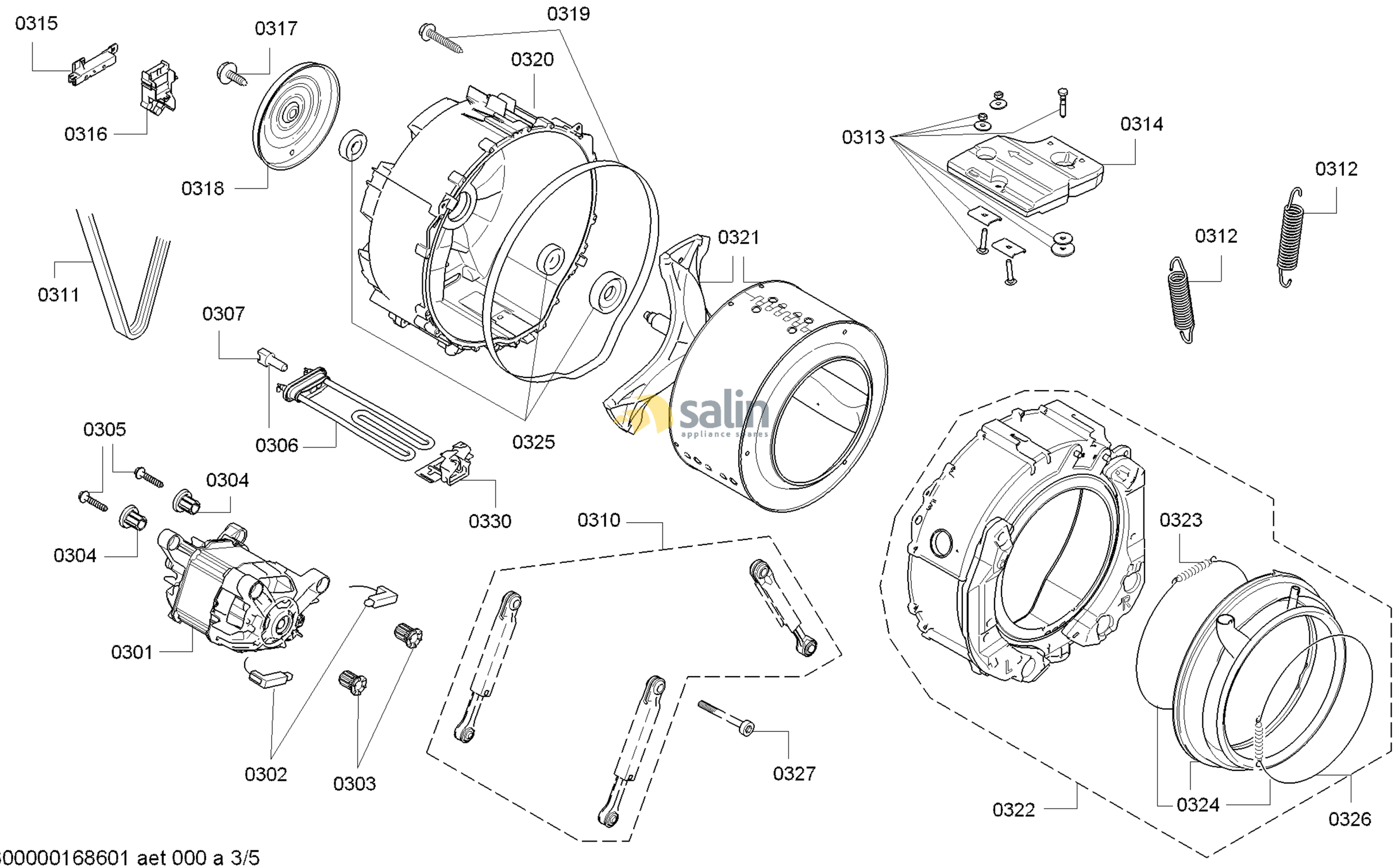

58300000168601 aet 000 a 3/5

FAMILY : WIS24120FF
MODEL NO: WIS24120FF/32
Check Position No/Part No or Replacement No

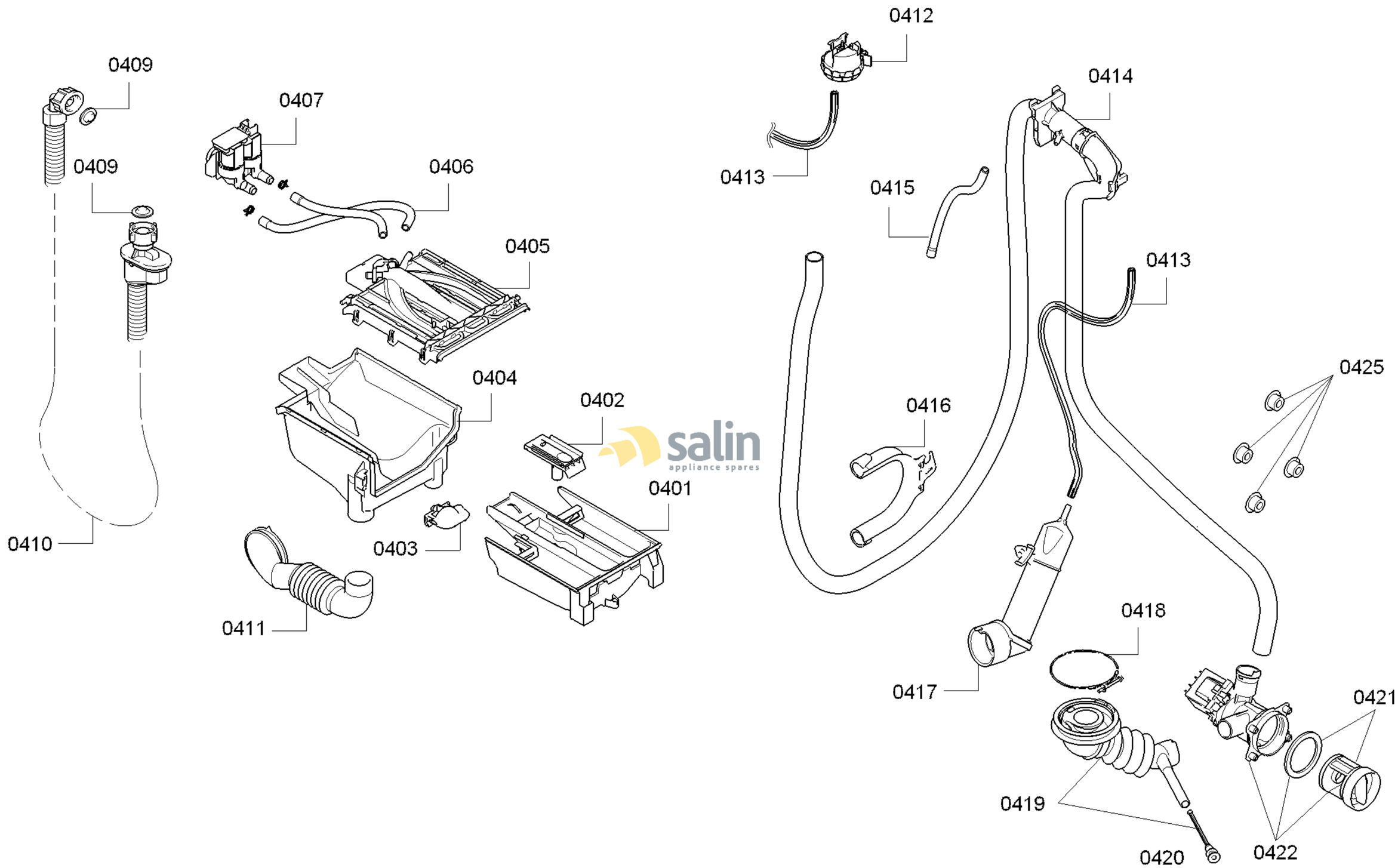

58300000168601 aet 000 a 4/5

FAMILY : WIS24120FF
MODEL NO: WIS24120FF/32
Check Position No/Part No or Replacement No

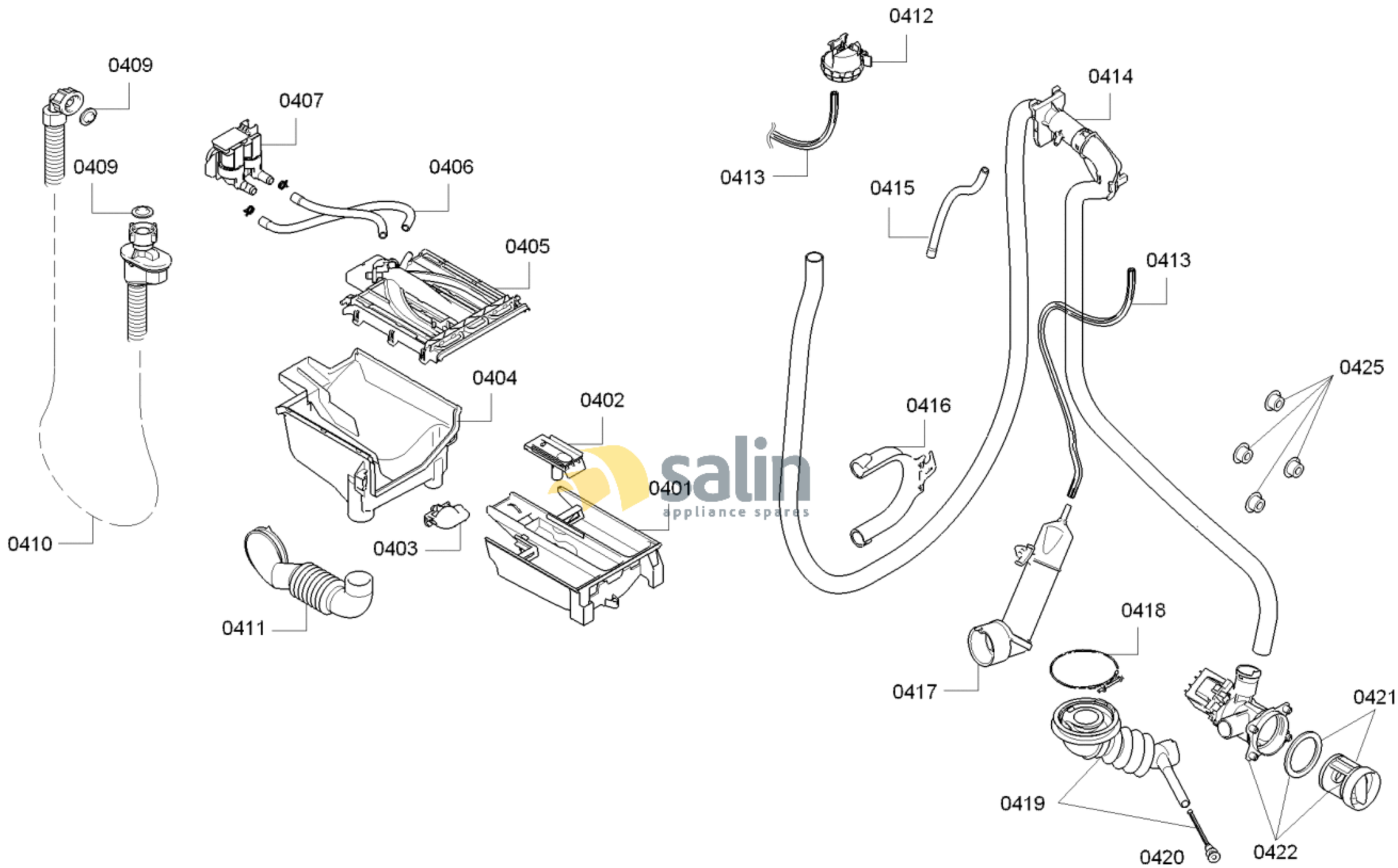

58300000168601 aet 000 a 4/5

FAMILY : WIS24120FF

MODEL NO: WIS24120FF/32

Check Position No/Part No or Replacement No