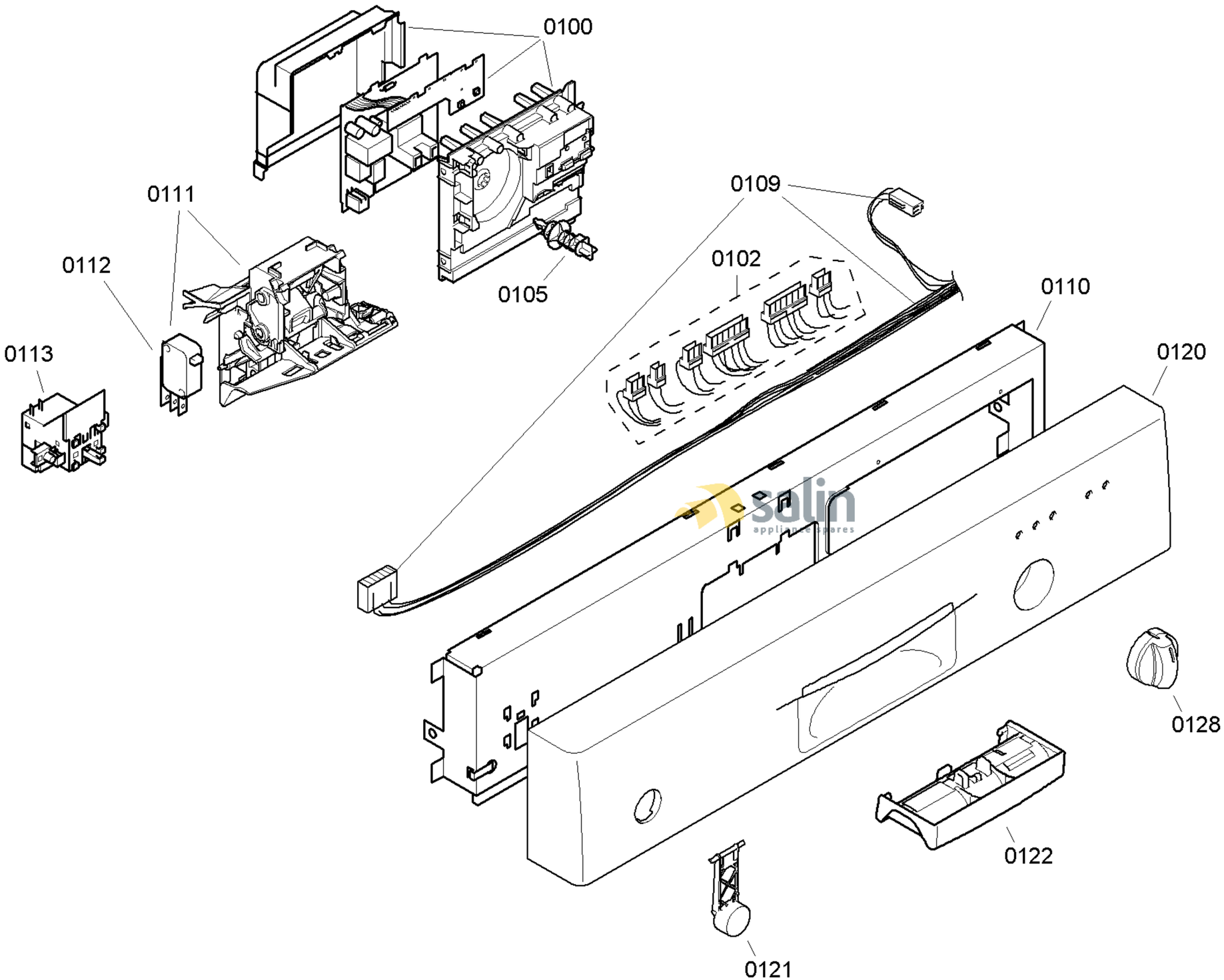

58300000125254 aet 000 a 1/6

FAMILY : SGS33E42EU
MODEL NO: SGS33E42EU/86
Check Position No/Part No or Replacement No

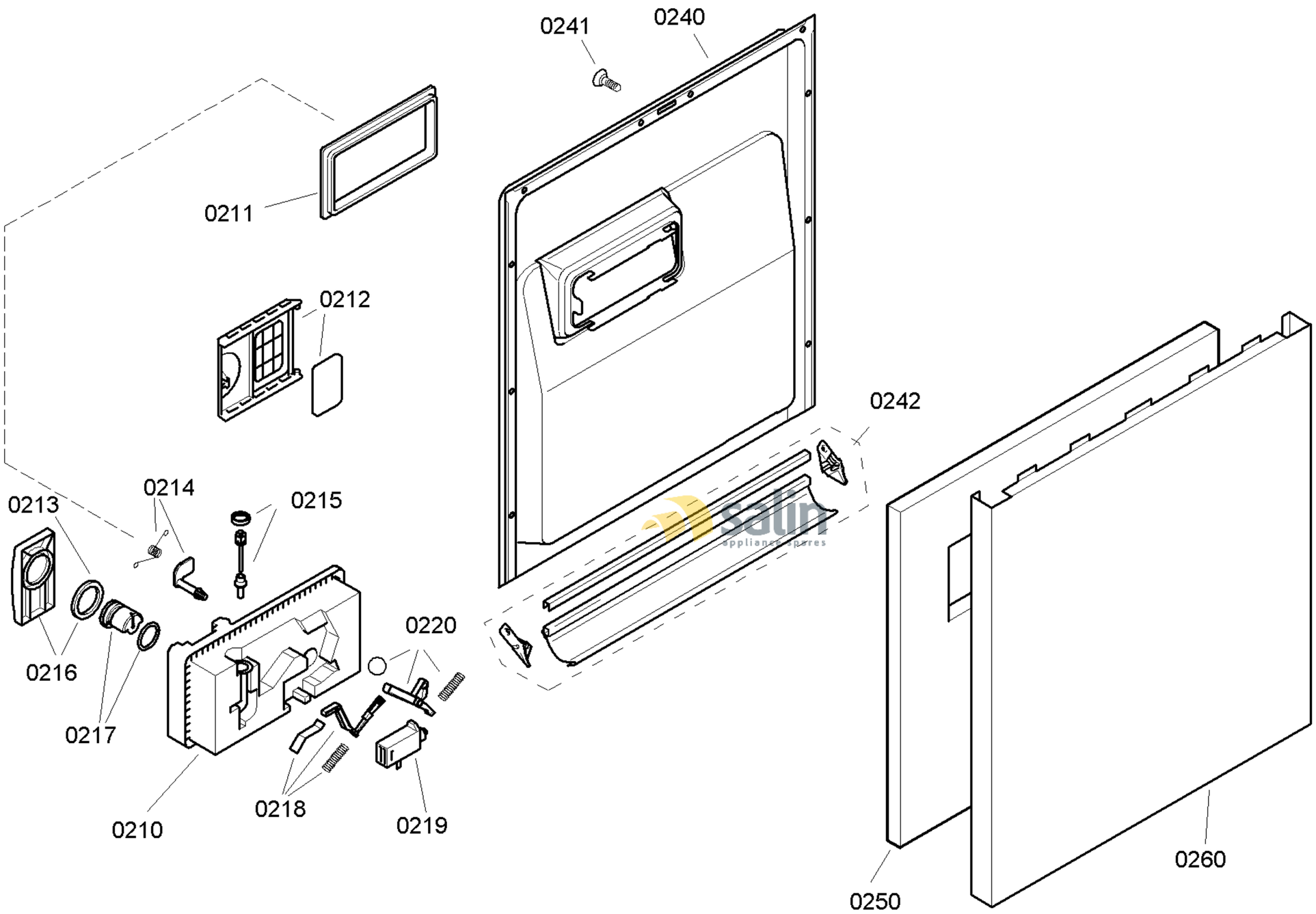

58300000125254 aet 000 a 2/6

FAMILY : SGS33E42EU
MODEL NO: SGS33E42EU/86
Check Position No/Part No or Replacement No

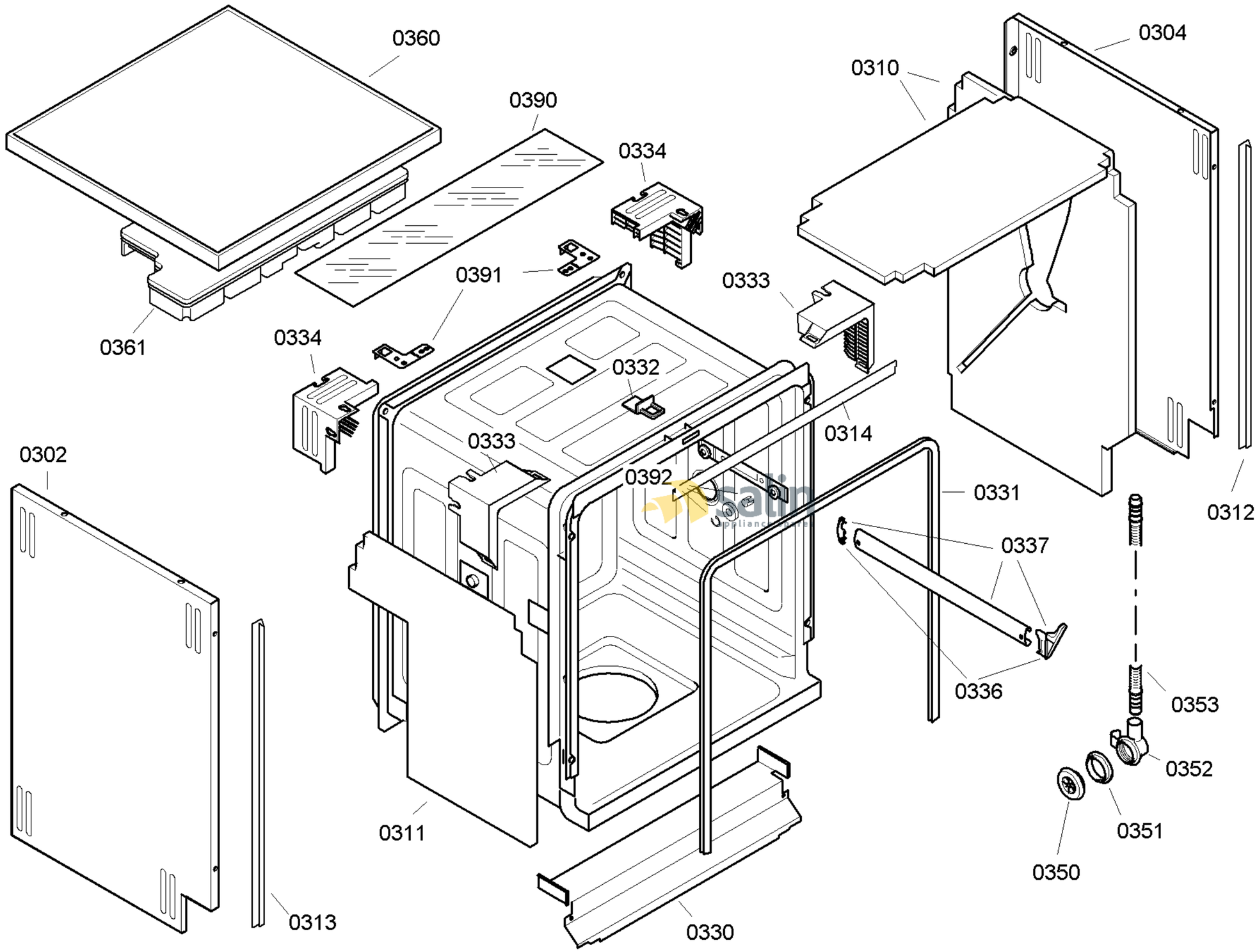

58300000125254 aet 000 a 3/6

FAMILY : SGS33E42EU
MODEL NO: SGS33E42EU/86
Check Position No/Part No or Replacement No

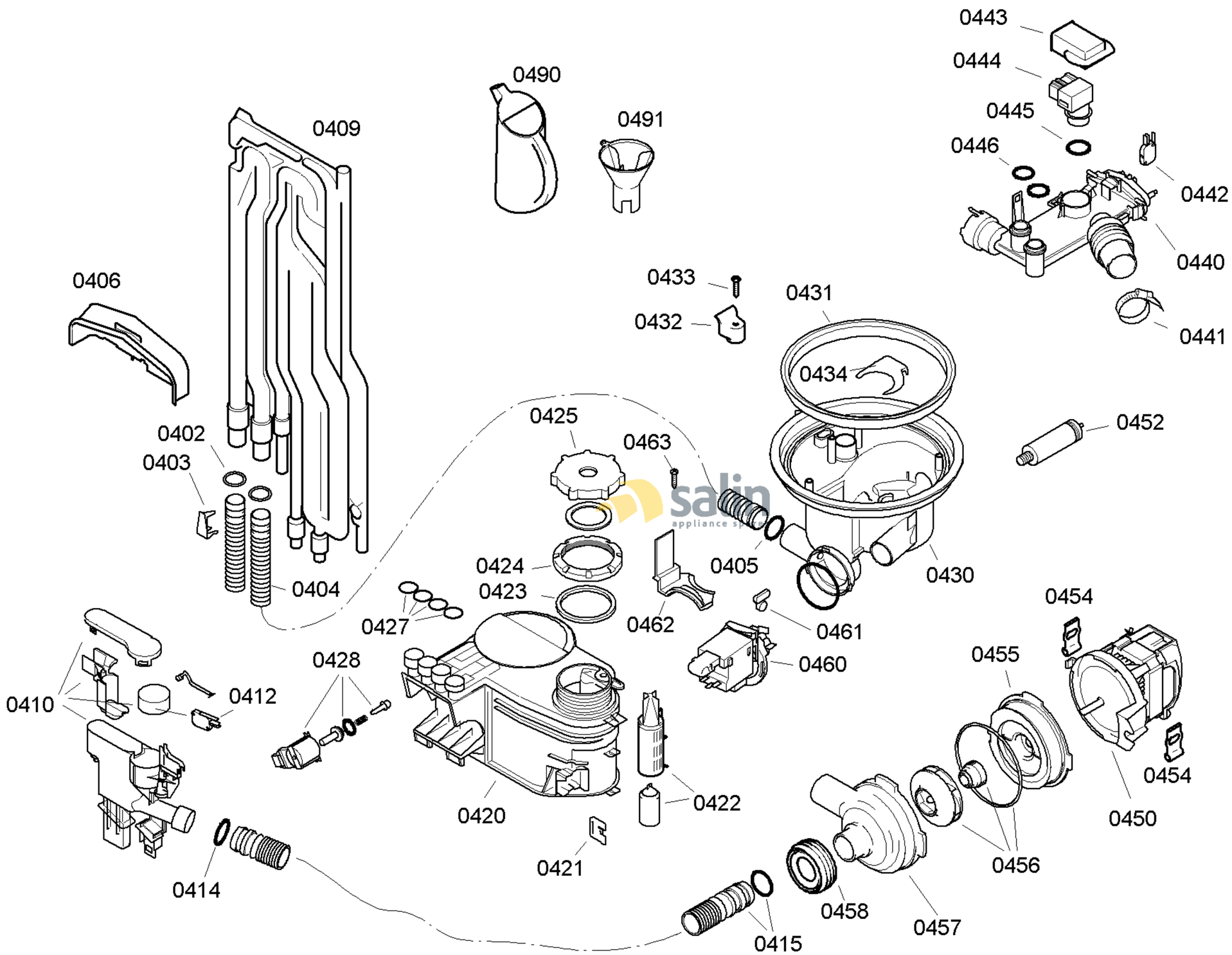

58300000125254 aet 000 a 4/6

FAMILY : SGS33E42EU
MODEL NO: SGS33E42EU/86
Check Position No/Part No or Replacement No

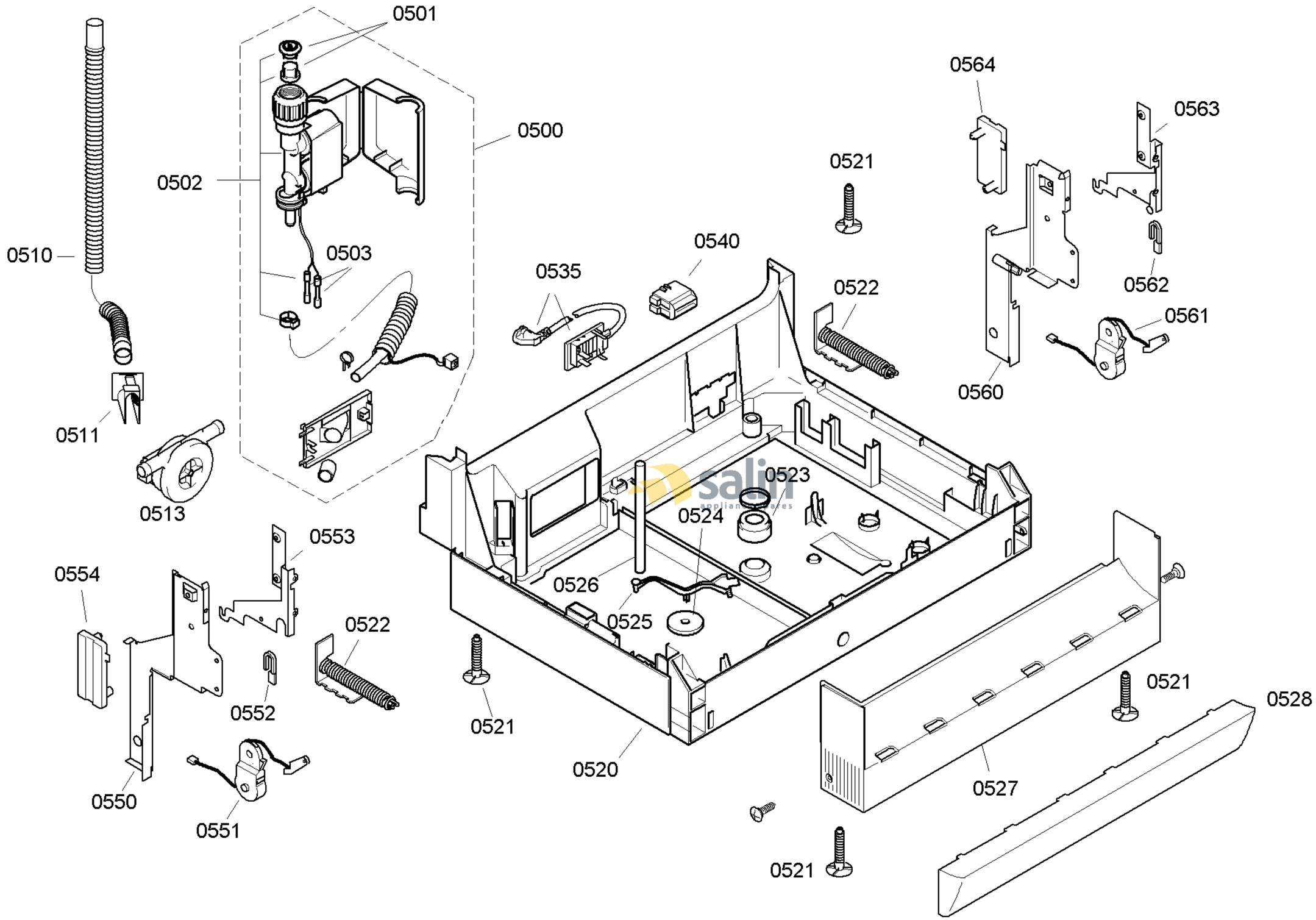

58300000125254 aet 000 a 5/6

FAMILY : SGS33E42EU
MODEL NO: SGS33E42EU/86
Check Position No/Part No or Replacement No

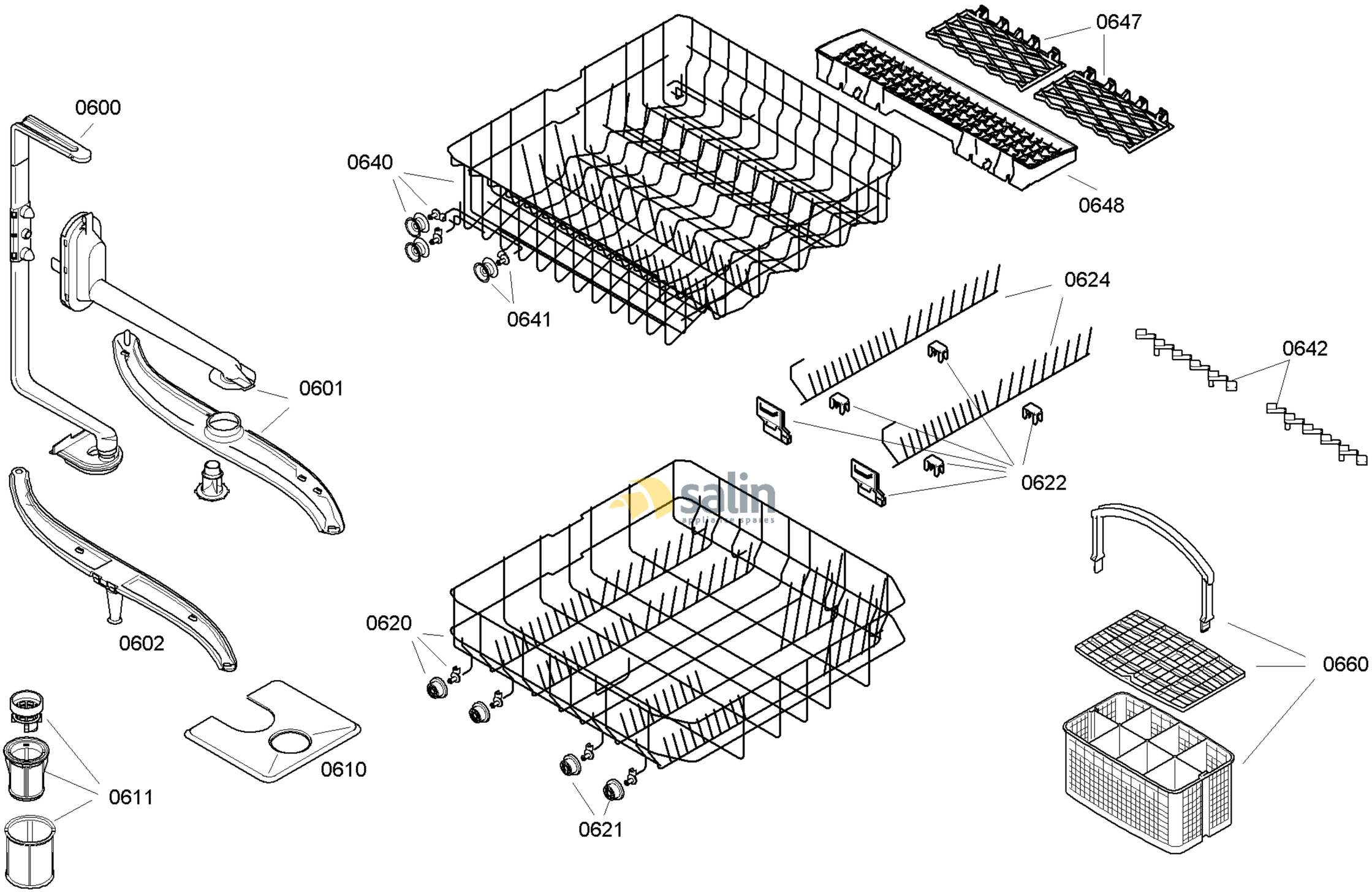

58300000125254 aet 000 a 6/6

FAMILY : SGS33E42EU
MODEL NO: SGS33E42EU/86
Check Position No/Part No or Replacement No