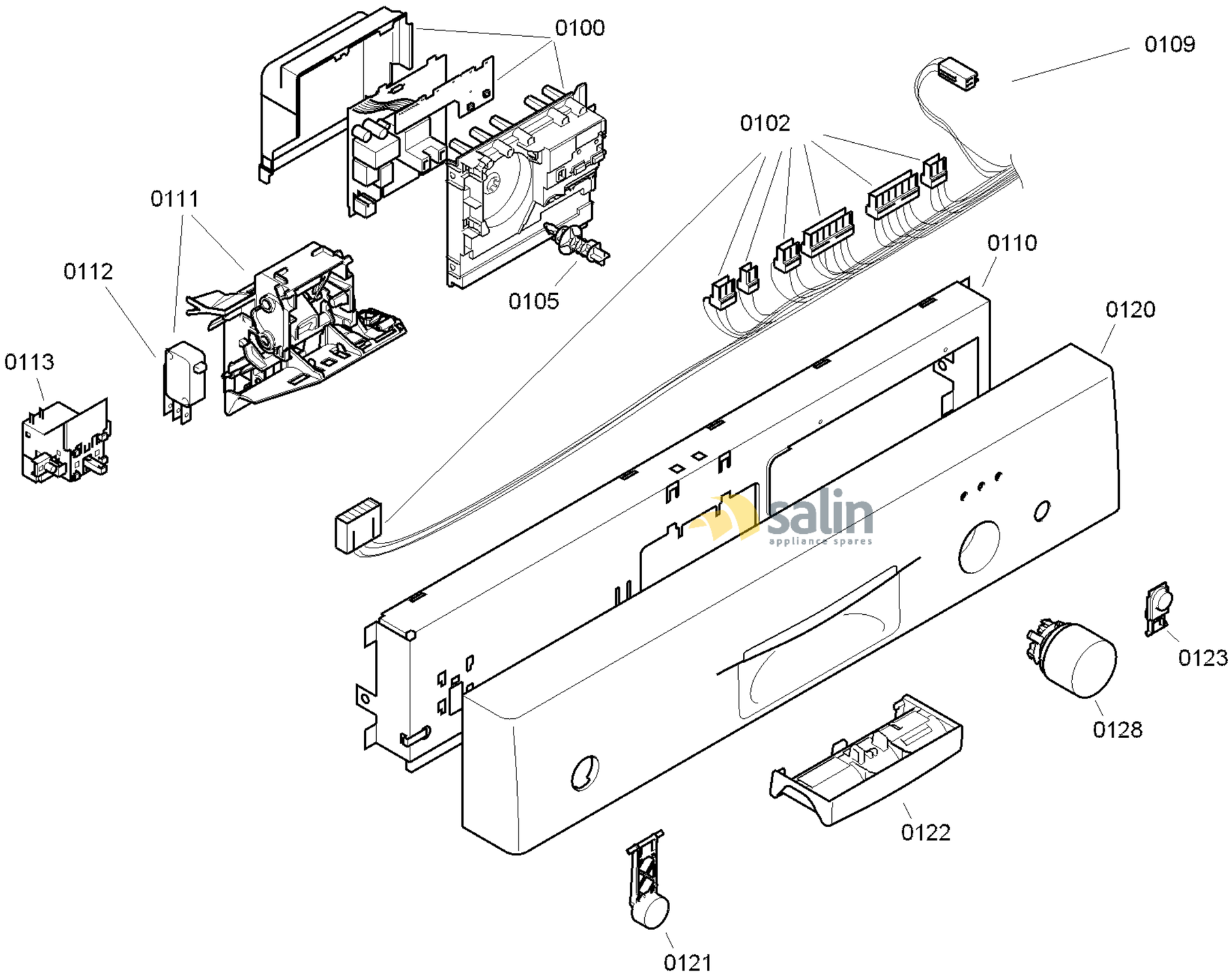

58300000116869 aet 000 e 1/6

FAMILY : SGS53E92EU
MODEL NO: SGS53E92EU/26
Check Position No/Part No or Replacement No

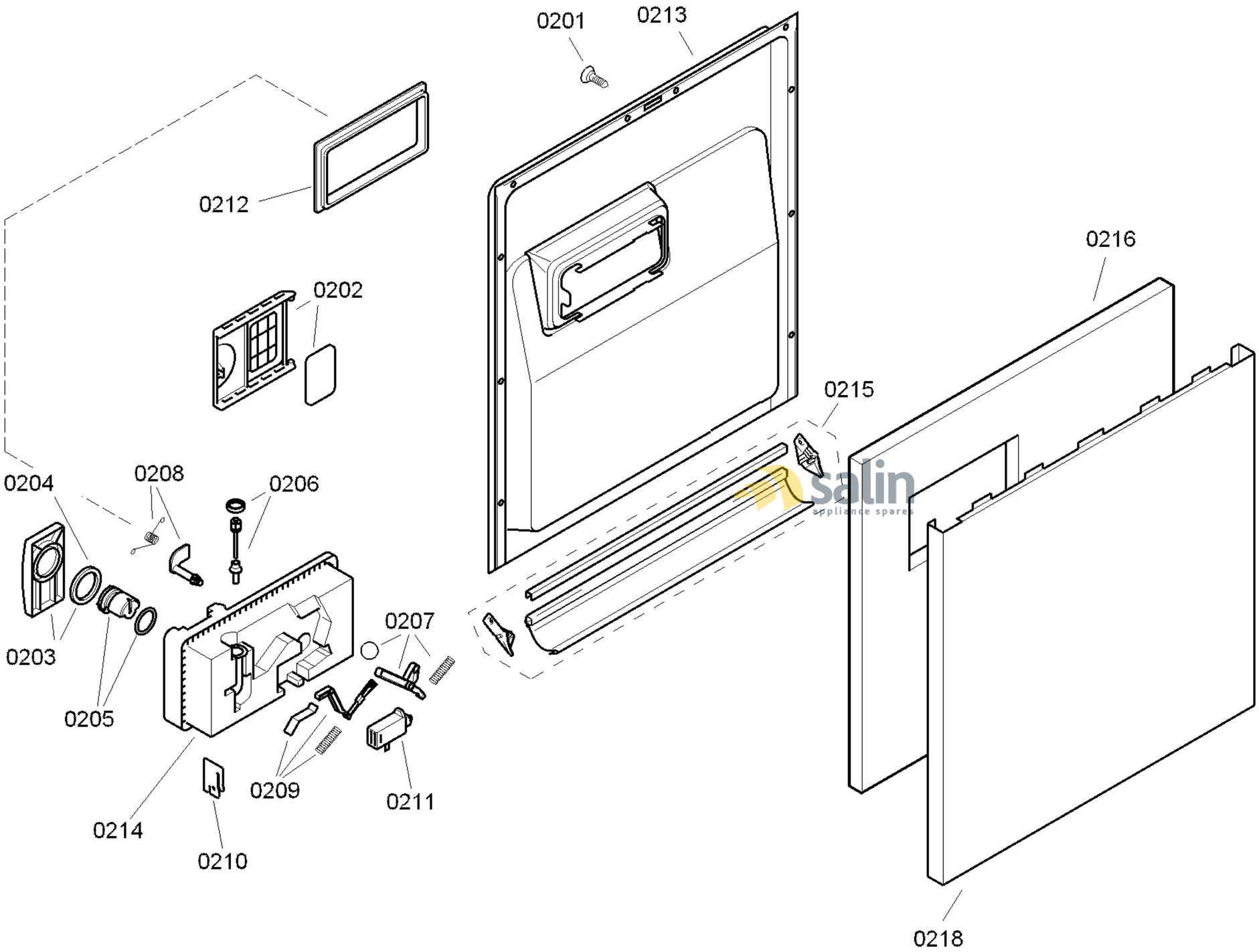

58300000116869 aet 000 e 2/6

FAMILY : SGS53E92EU
MODEL NO: SGS53E92EU/26
Check Position No/Part No or Replacement No

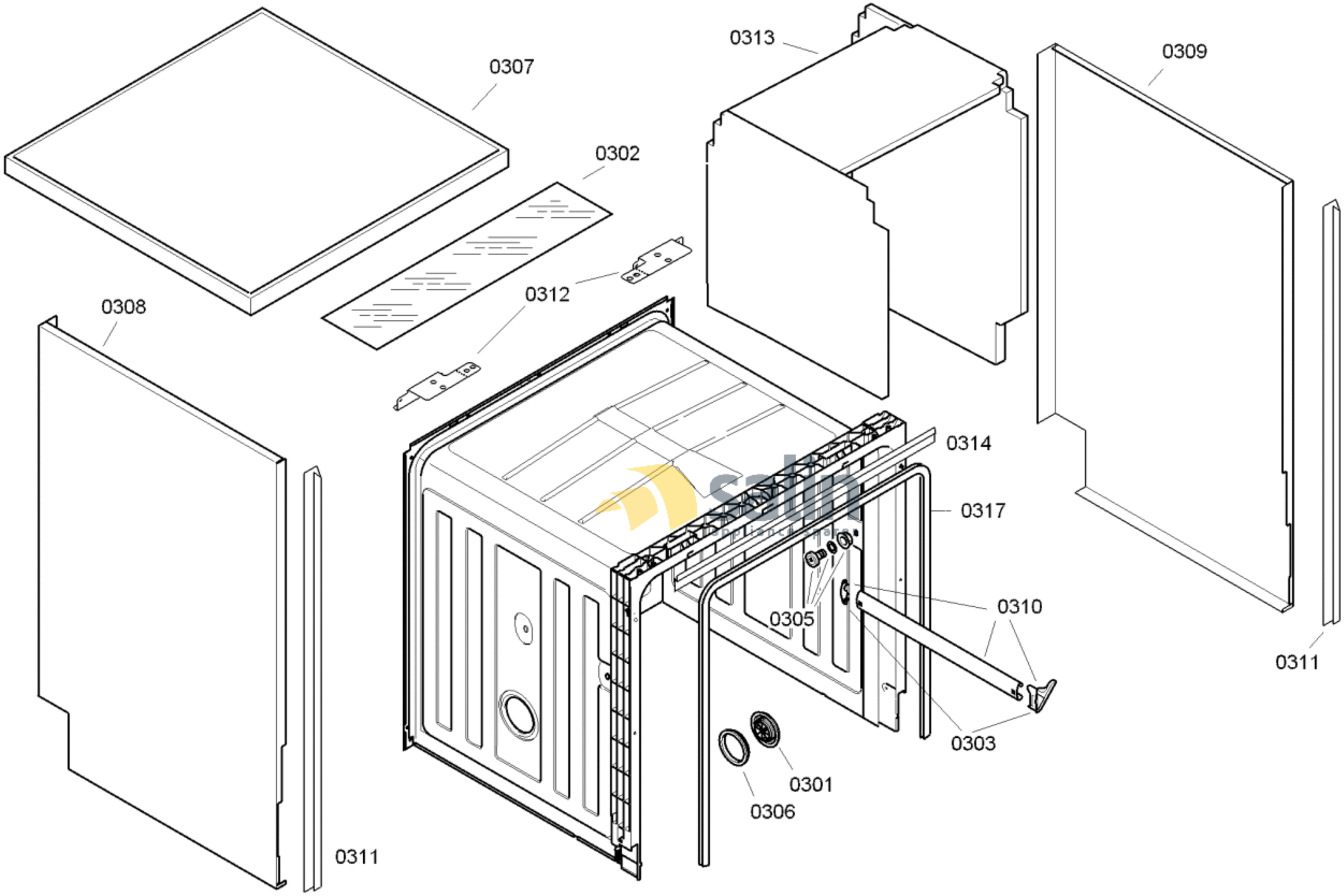

58300000116869 aet 000 e 3/6

FAMILY : SGS53E92EU

MODEL NO: SGS53E92EU/26

Check Position No/Part No or Replacement No

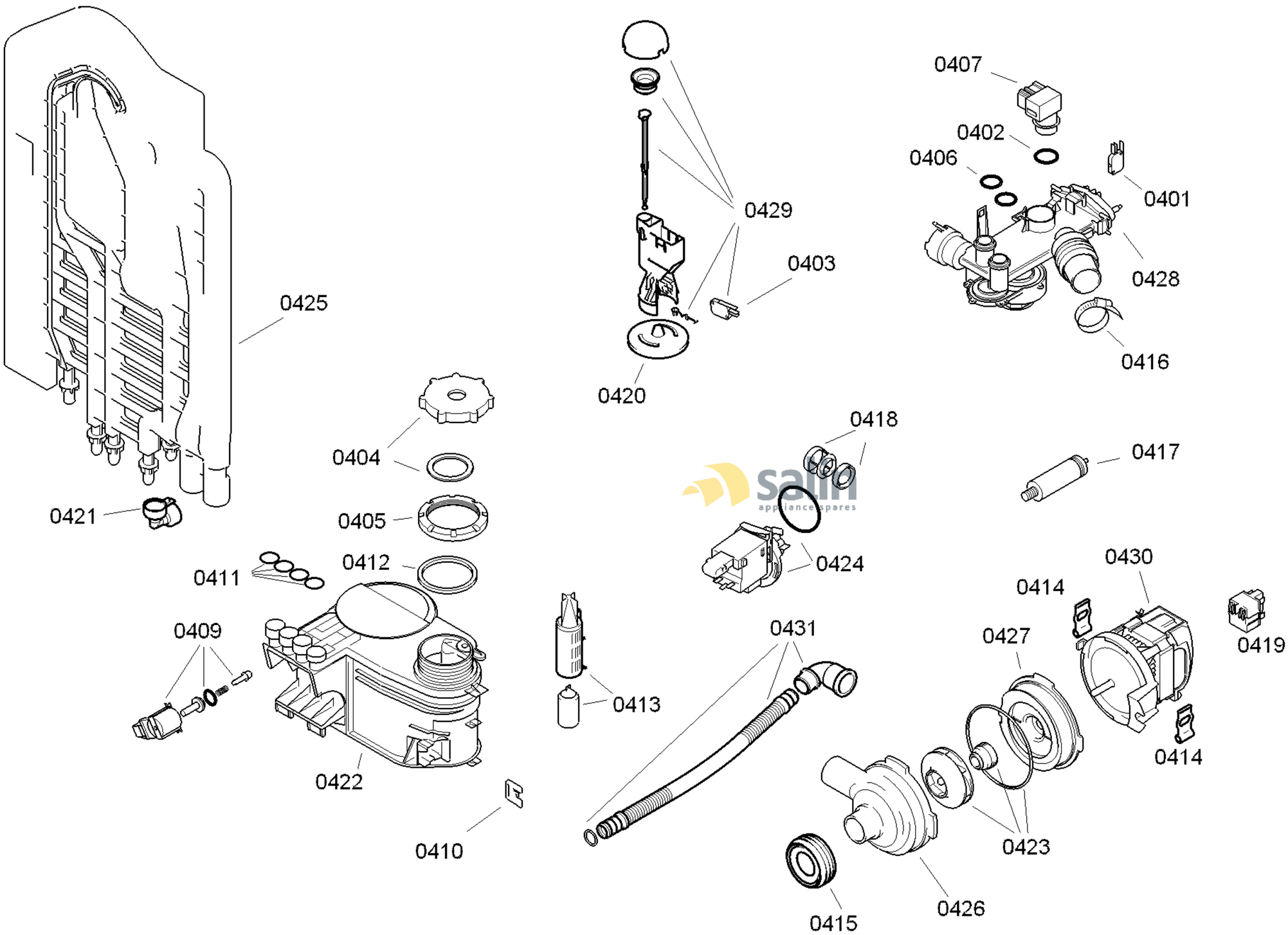

58300000116869 aet 000 e 4/6

FAMILY : SGS53E92EU
MODEL NO: SGS53E92EU/26
Check Position No/Part No or Replacement No

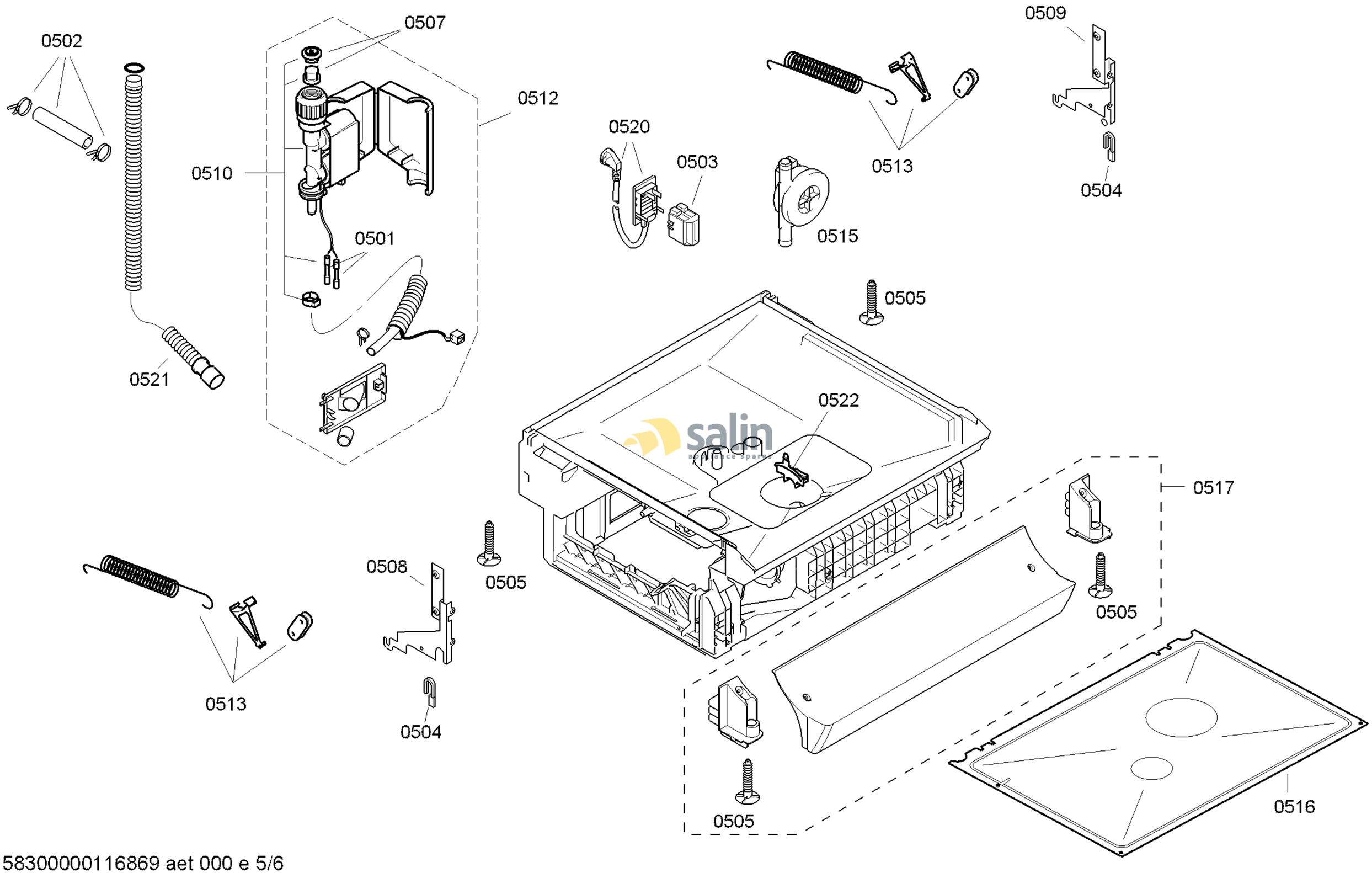

58300000116869 aet 000 e 5/6

FAMILY : SGS53E92EU
MODEL NO: SGS53E92EU/26
Check Position No/Part No or Replacement No

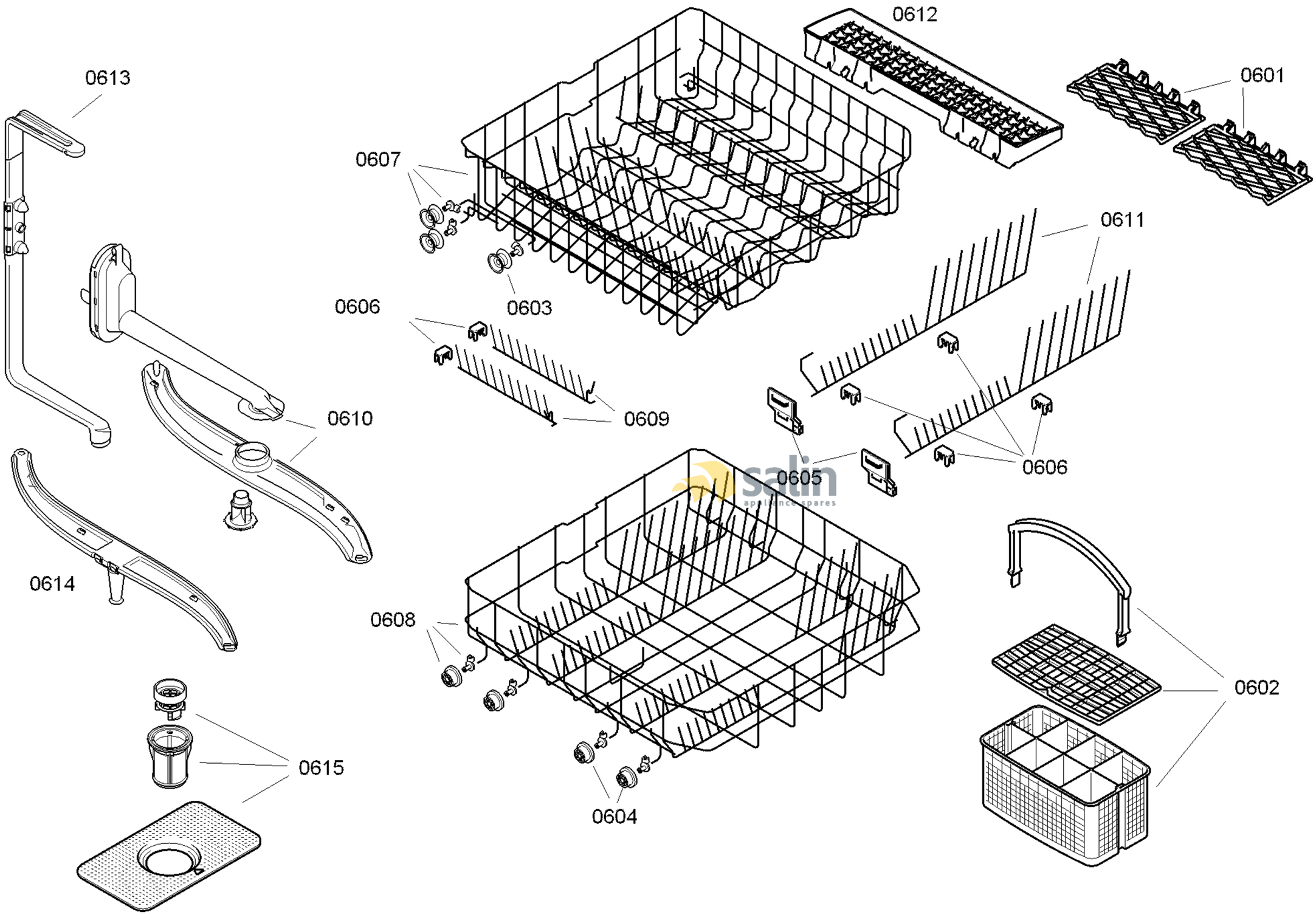

58300000116869 aet 000 e 6/6

FAMILY : SGS53E92EU
MODEL NO: SGS53E92EU/26
Check Position No/Part No or Replacement No