0199

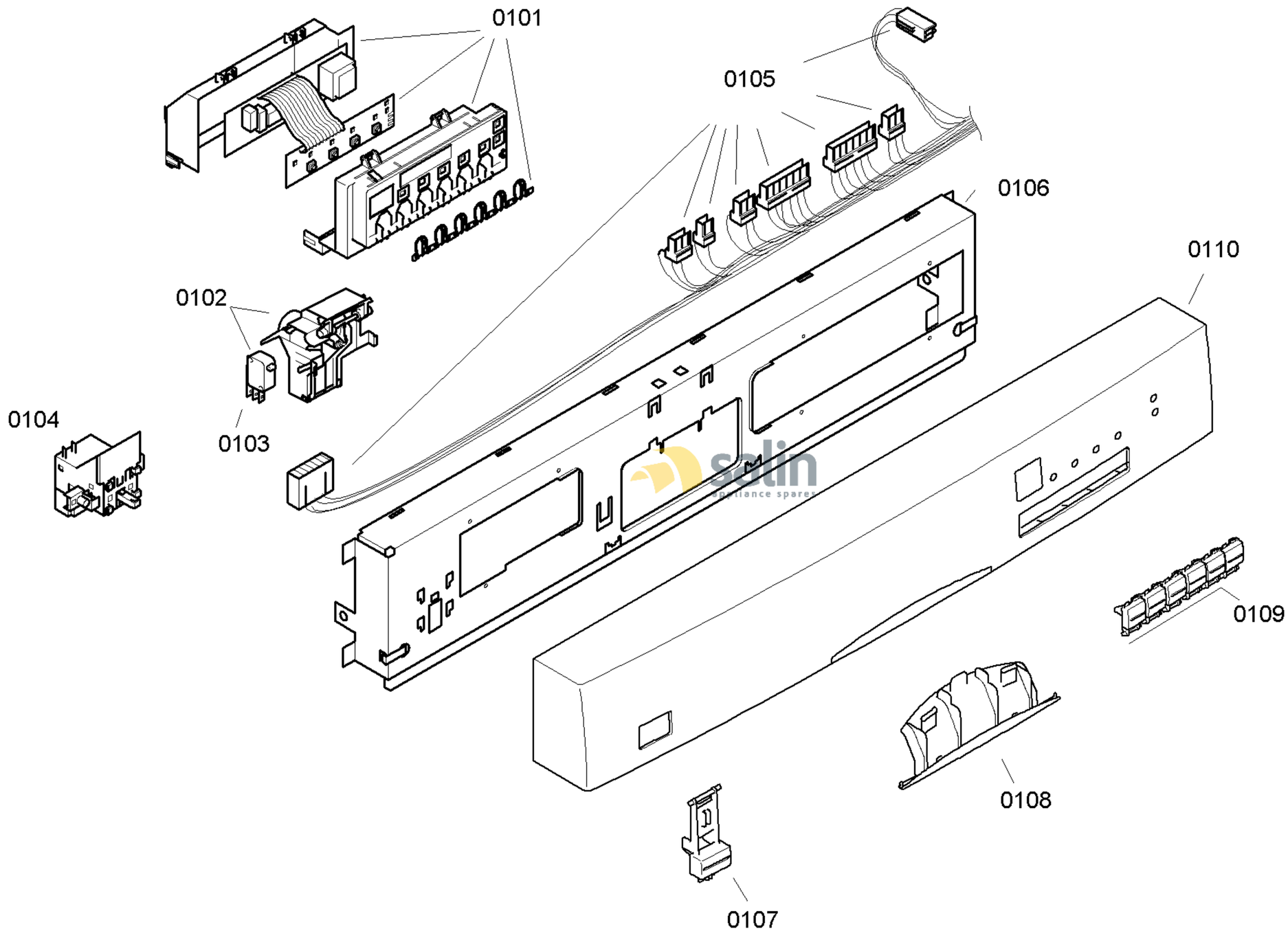

58300000130493 aet 000 a 1/6

FAMILY : SGS46E28GB
MODEL NO: SGS46E28GB/82
Check Position No/Part No or Replacement No

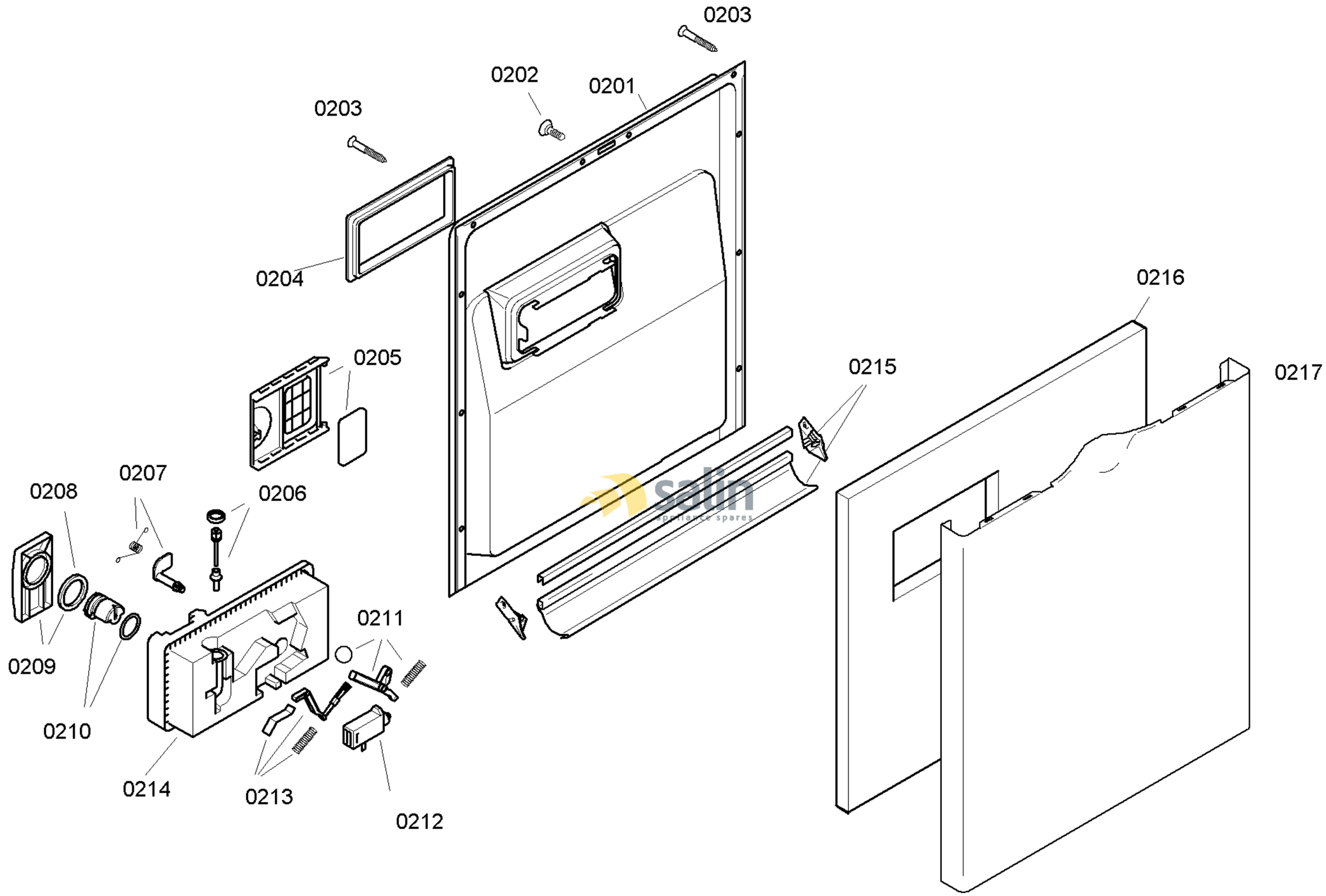

58300000130493 aet 000 a 2/6

FAMILY : SGS46E28GB
MODEL NO: SGS46E28GB/82
Check Position No/Part No or Replacement No

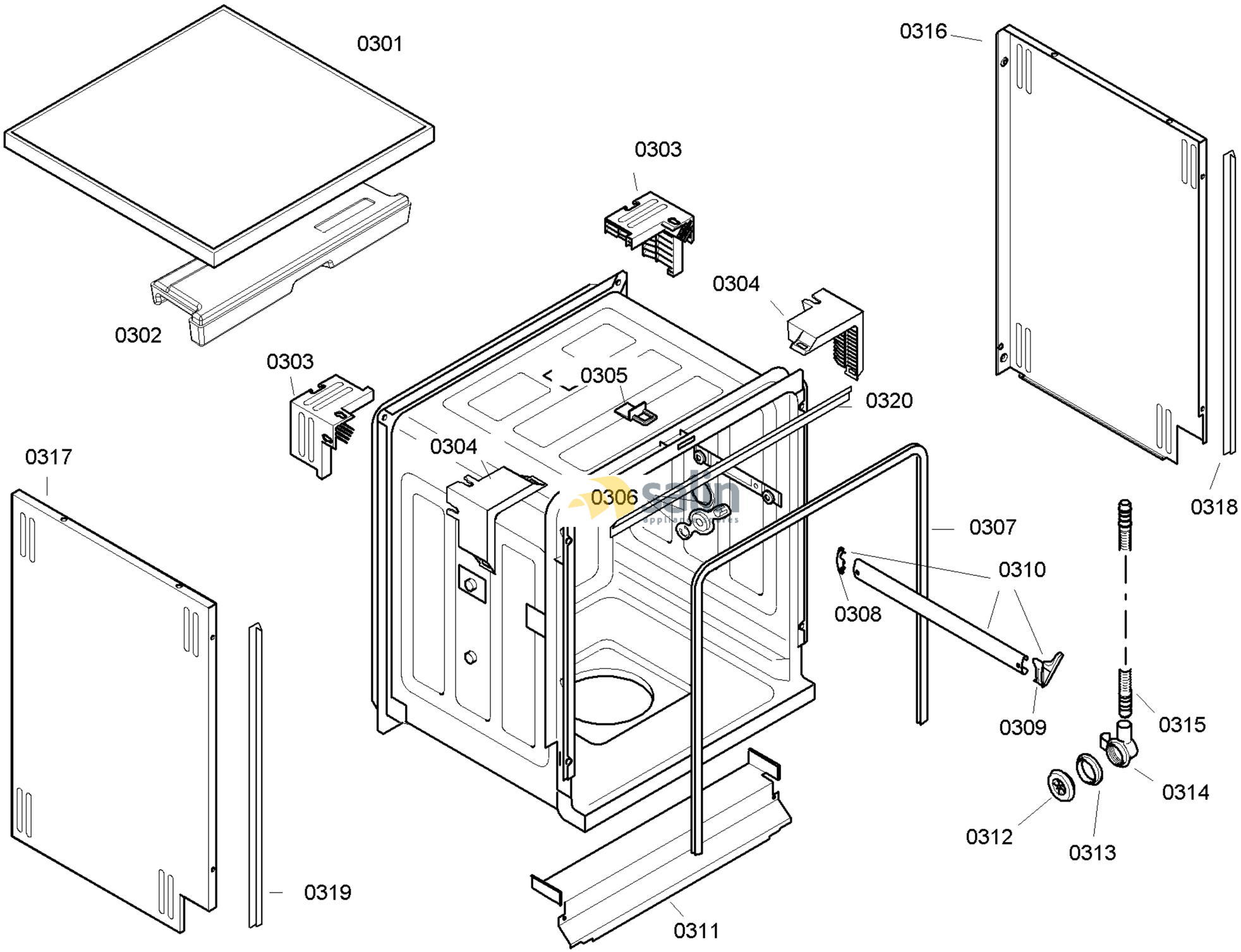

58300000130493 aet 000 a 3/6

FAMILY : SGS46E28GB
MODEL NO: SGS46E28GB/82
Check Position No/Part No or Replacement No

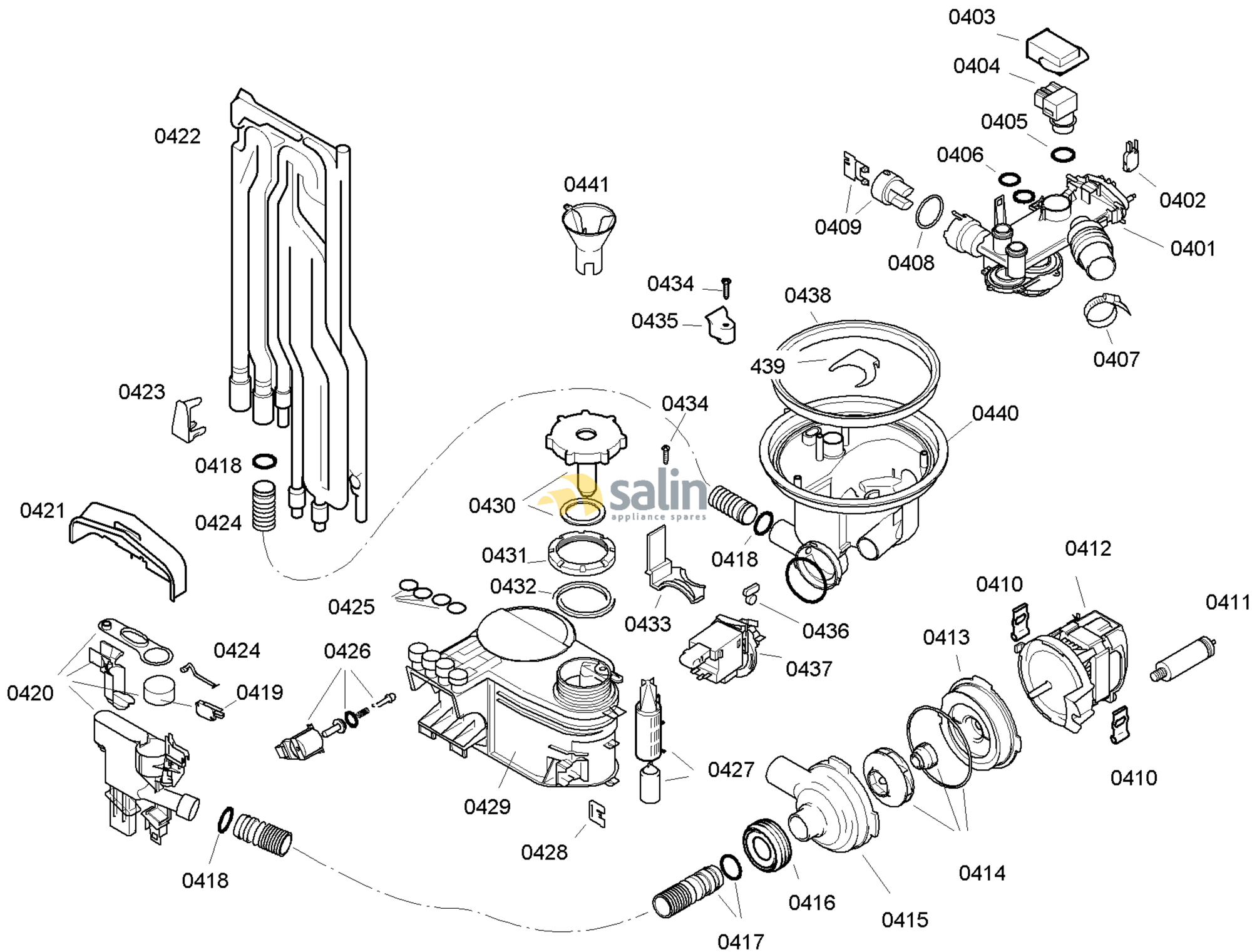

58300000130493 aet 000 a 4/6

FAMILY : SGS46E28GB
MODEL NO: SGS46E28GB/82
Check Position No/Part No or Replacement No

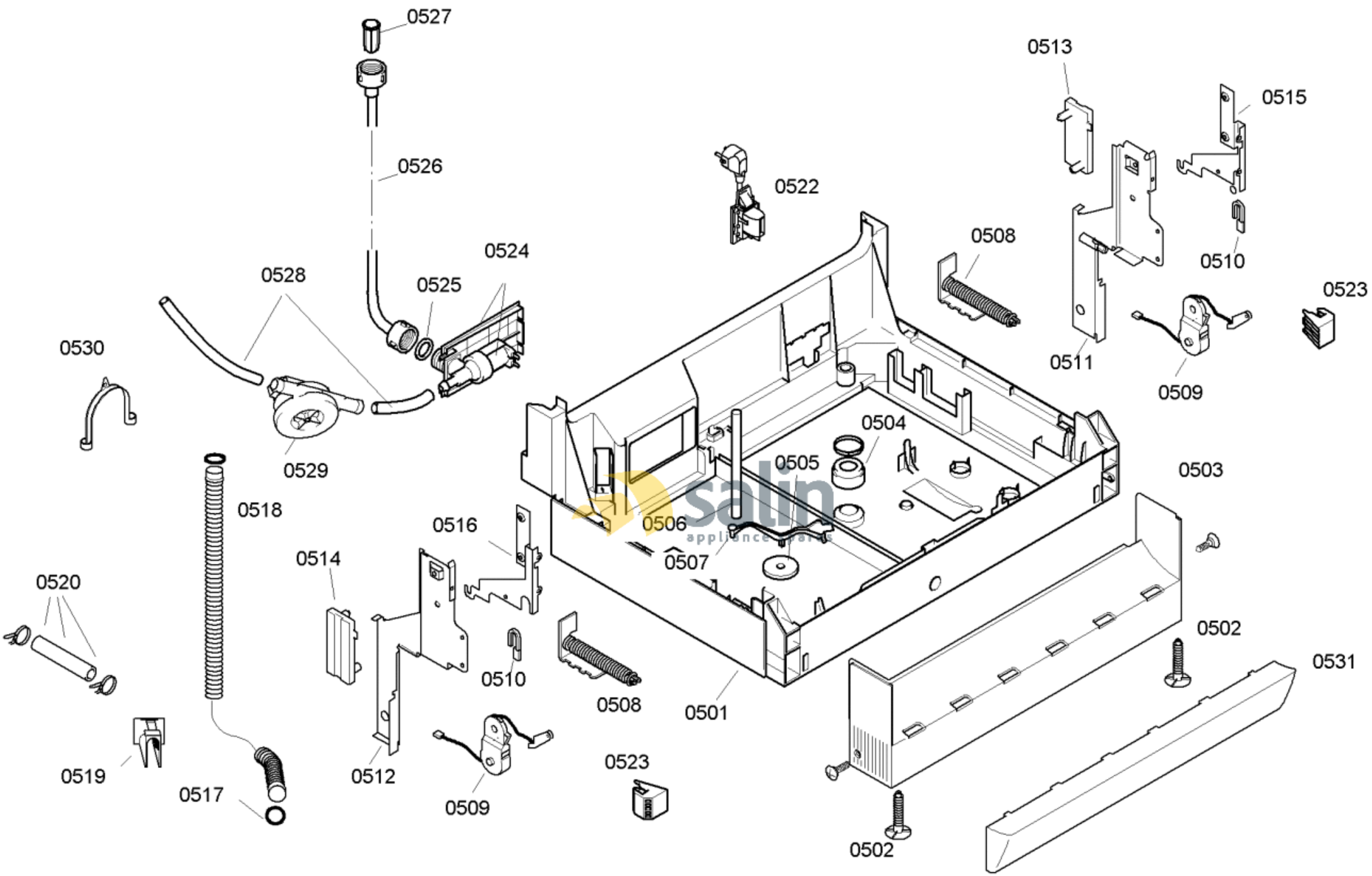

58300000130493 aet 000 a 5/6

FAMILY : SGS46E28GB

MODEL NO: SGS46E28GB/82

Check Position No/Part No or Replacement No

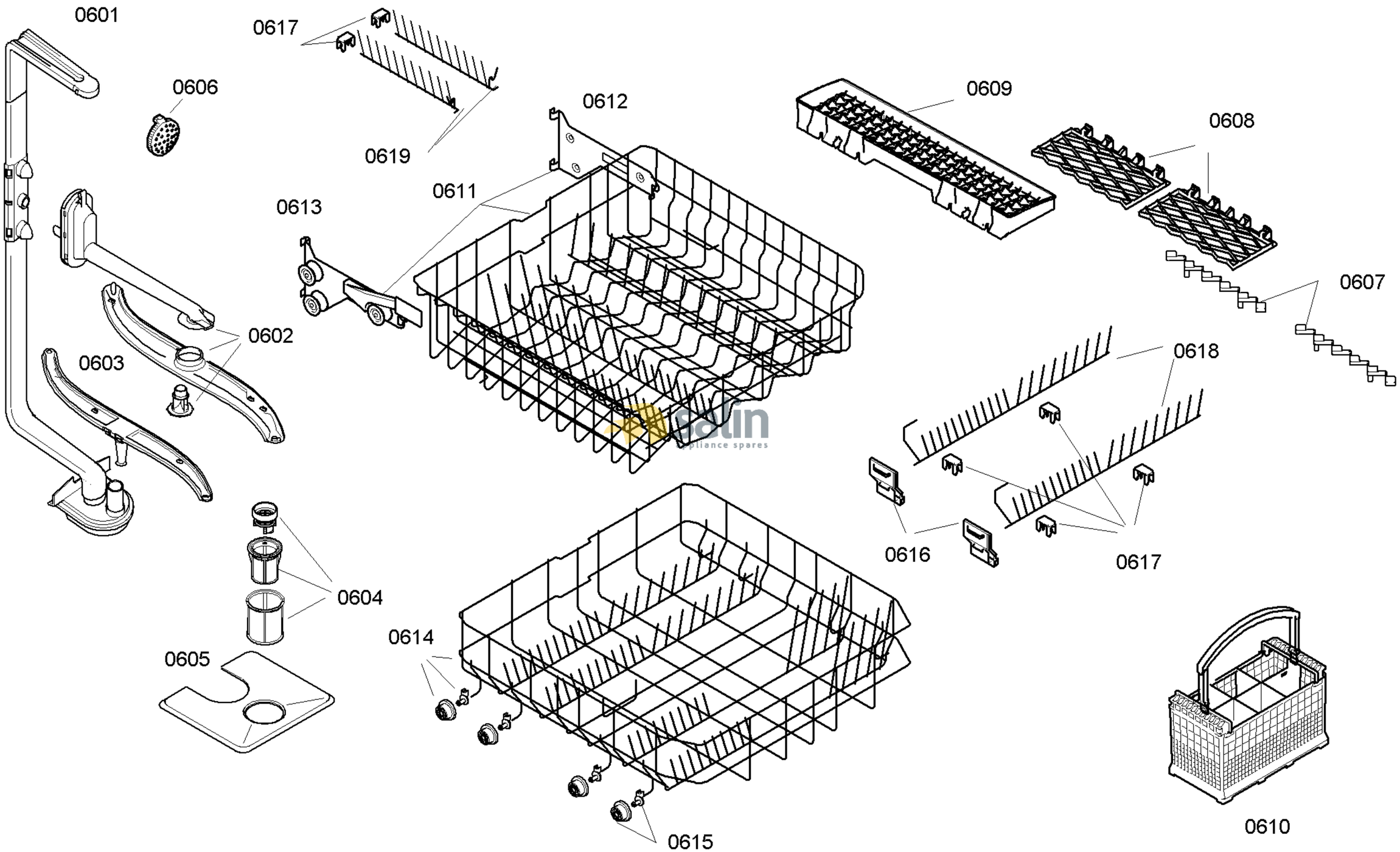

58300000130493 aet 000 a 6/6

FAMILY : SGS46E28GB
MODEL NO: SGS46E28GB/82
Check Position No/Part No or Replacement No