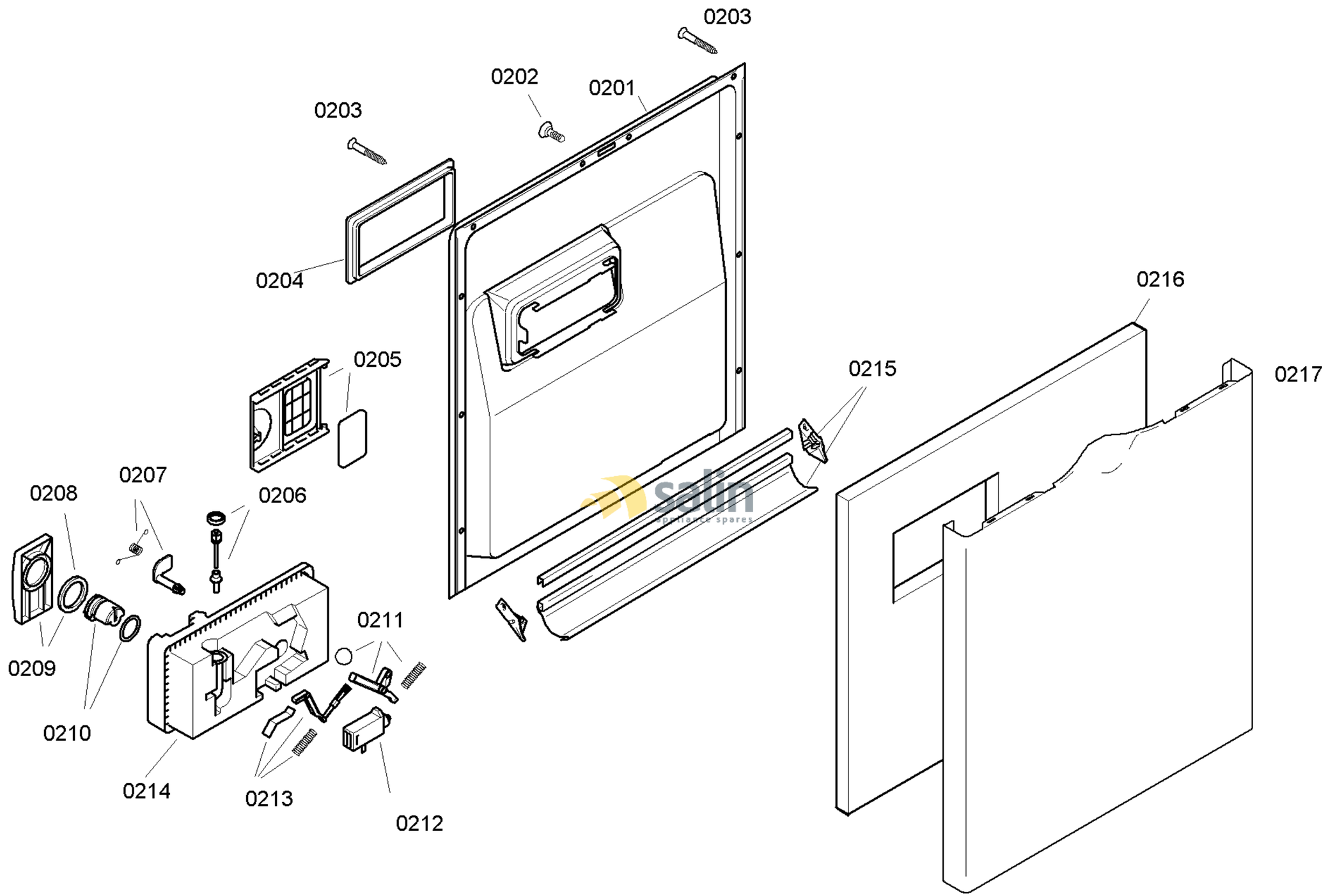

58300000130459 aet 000 a 2/6

FAMILY : SGS55M68EU
MODEL NO: SGS55M68EU/90
Check Position No/Part No or Replacement No

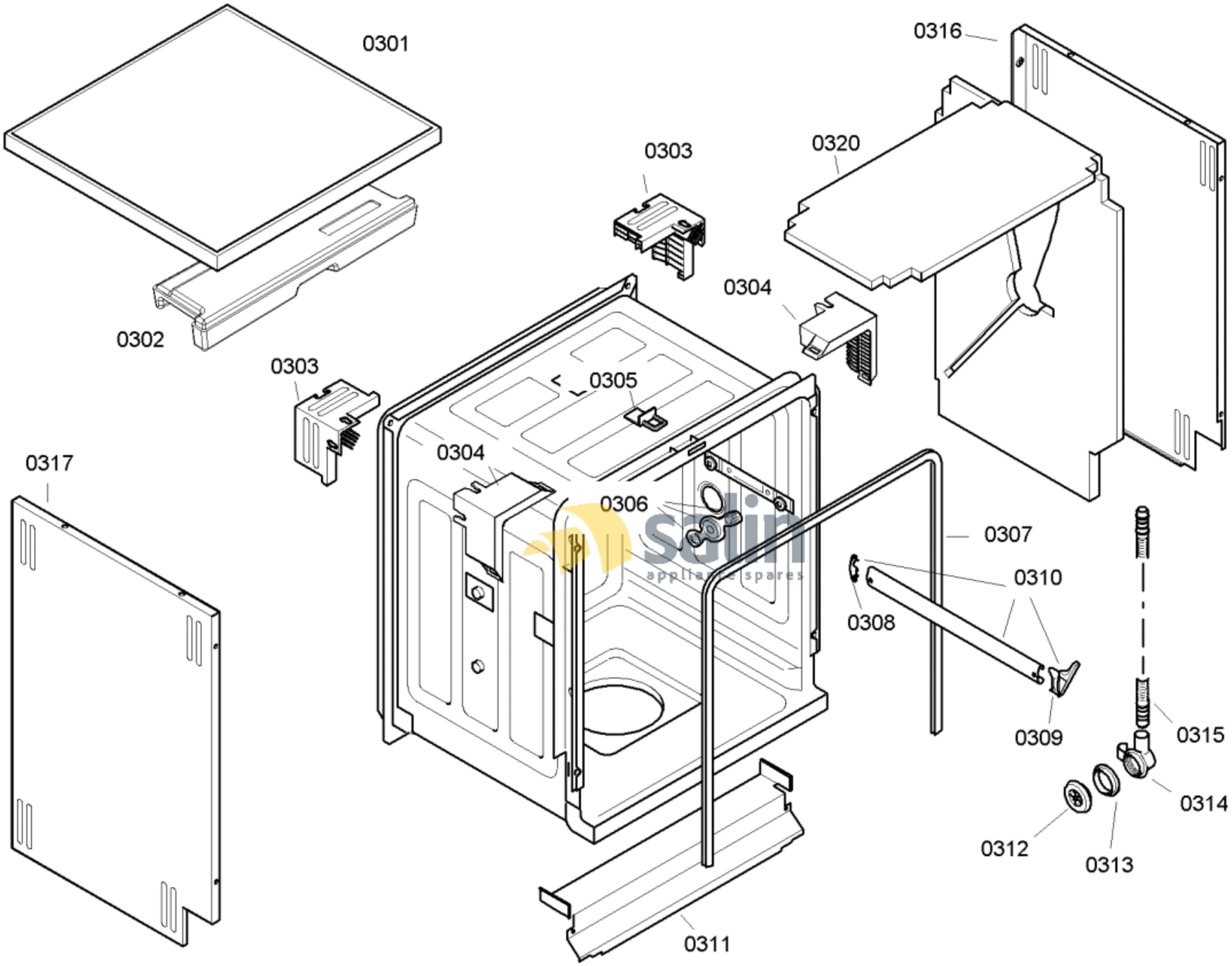

58300000130459 aet 000 a 3/6

FAMILY : SGS55M68EU

MODEL NO: SGS55M68EU/90

Check Position No/Part No or Replacement No

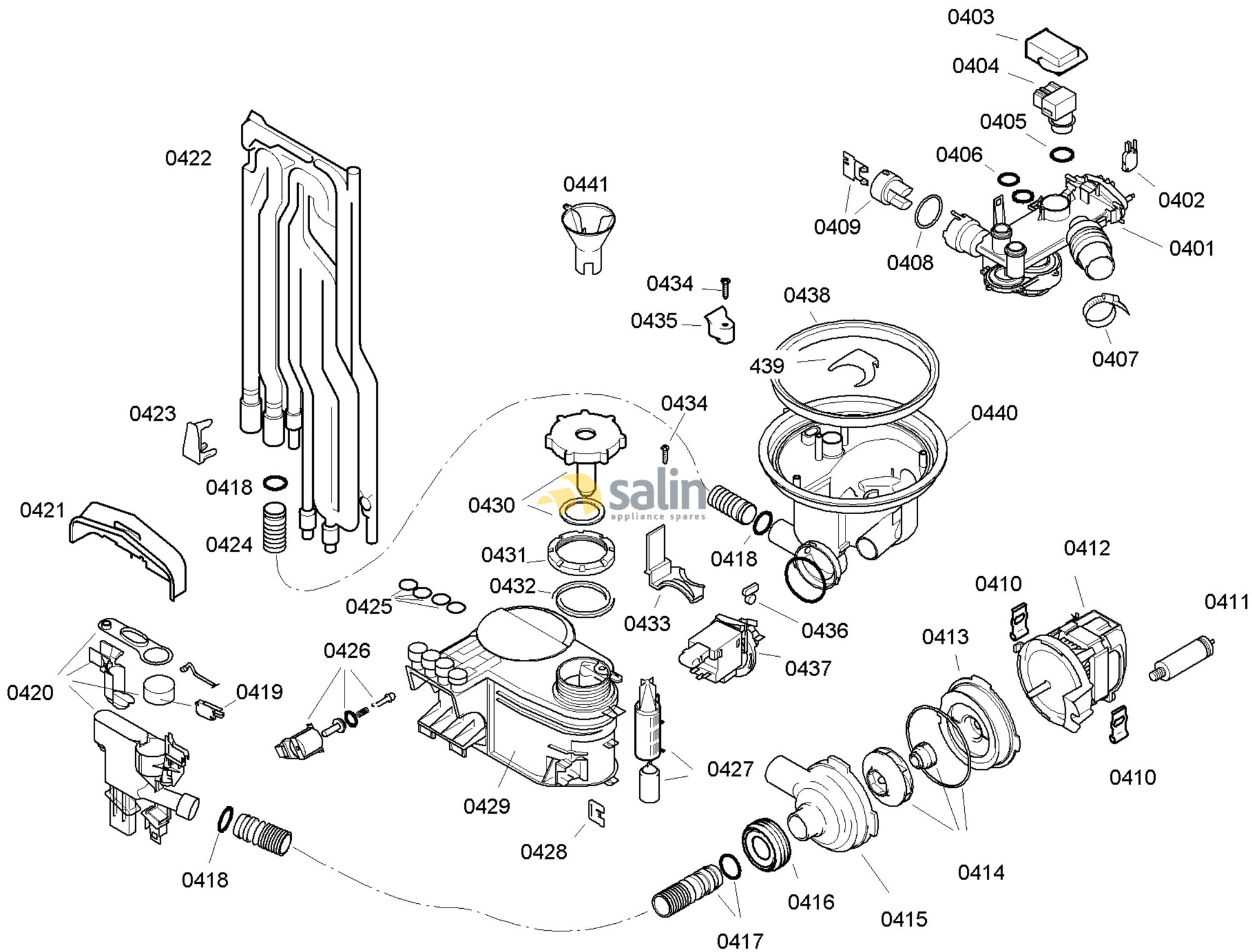

58300000130459 aet 000 a 4/6

FAMILY : SGS55M68EU
MODEL NO: SGS55M68EU/90
Check Position No/Part No or Replacement No

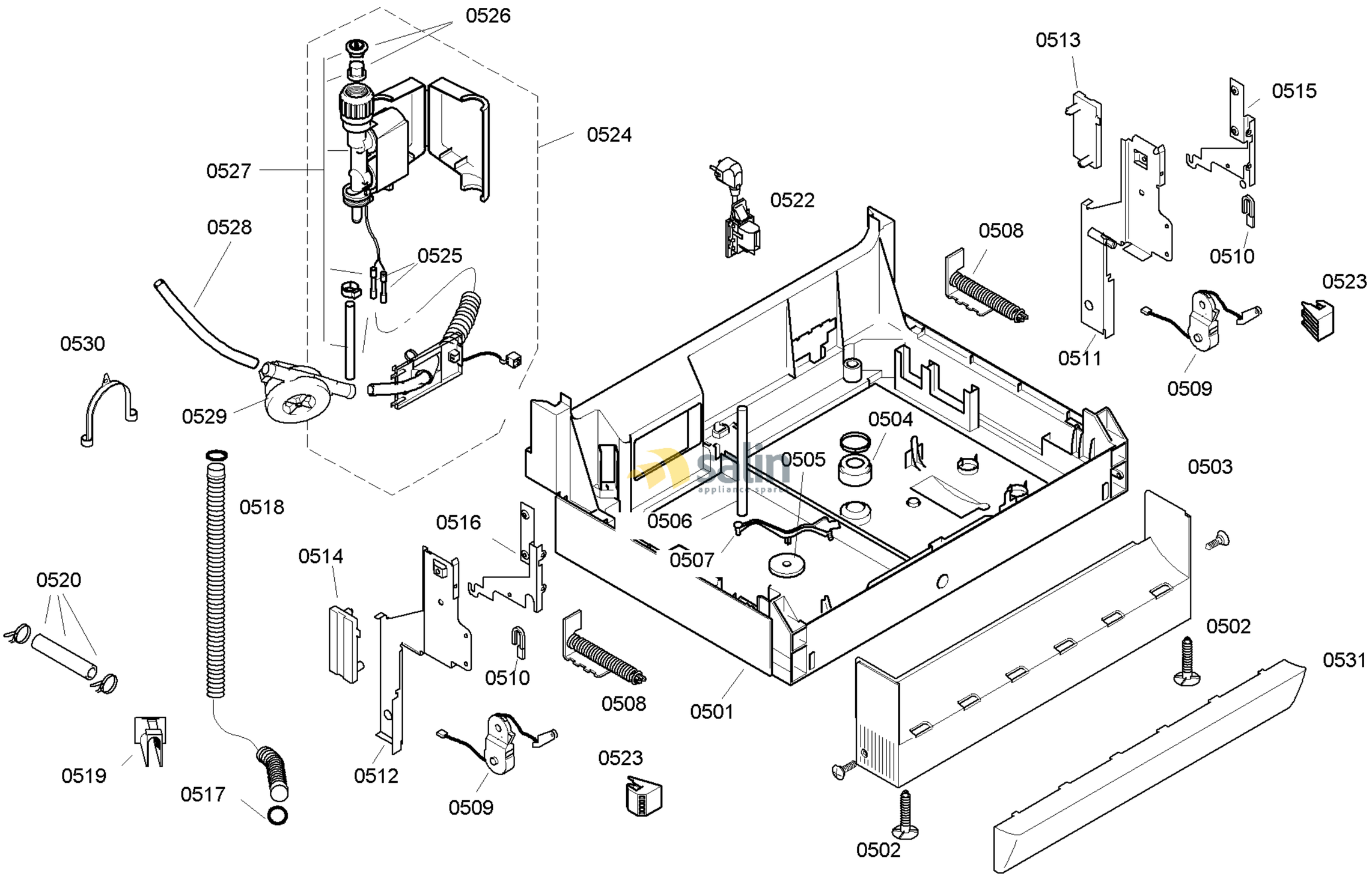

58300000130459 aet 000 a 5/6

FAMILY : SGS55M68EU
MODEL NO: SGS55M68EU/90
Check Position No/Part No or Replacement No

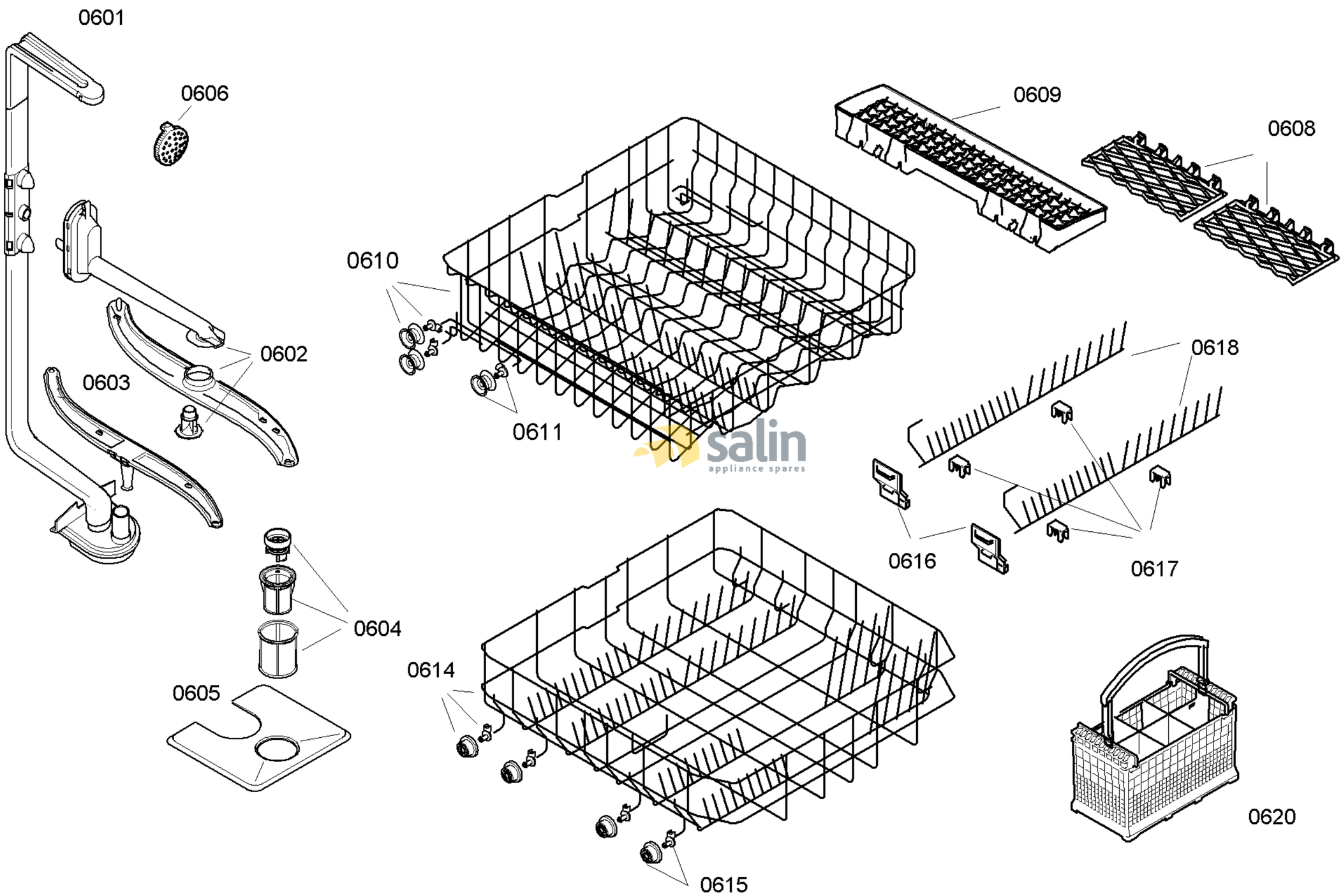

58300000130459 aet 000 a 6/6

FAMILY : SGS55M68EU
MODEL NO: SGS55M68EU/90
Check Position No/Part No or Replacement No