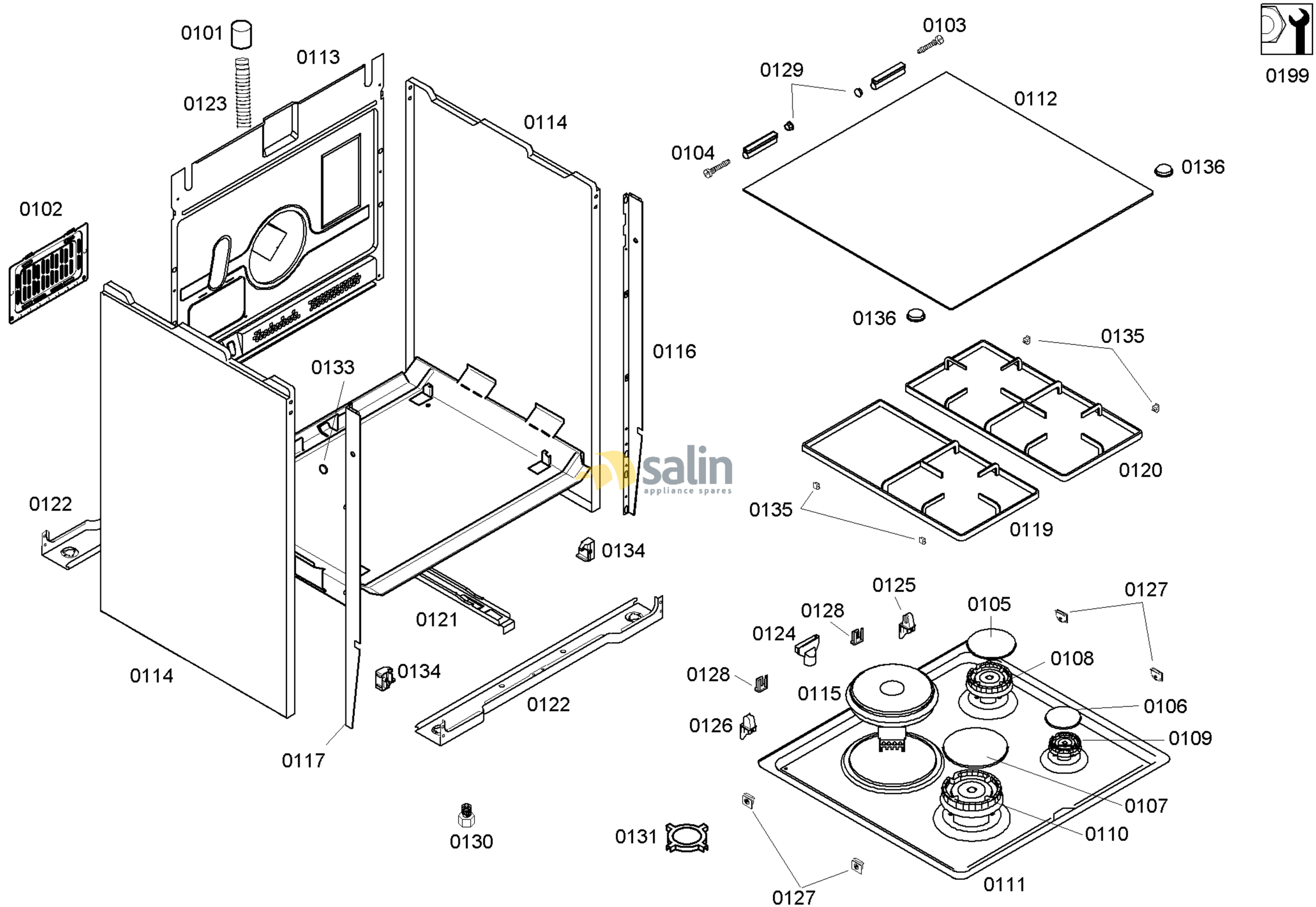

58300000149979 aet 000 a 1/6

FAMILY : HGV74D350T
MODEL NO: HGV74D350T/09
Check Position No/Part No or Replacement No

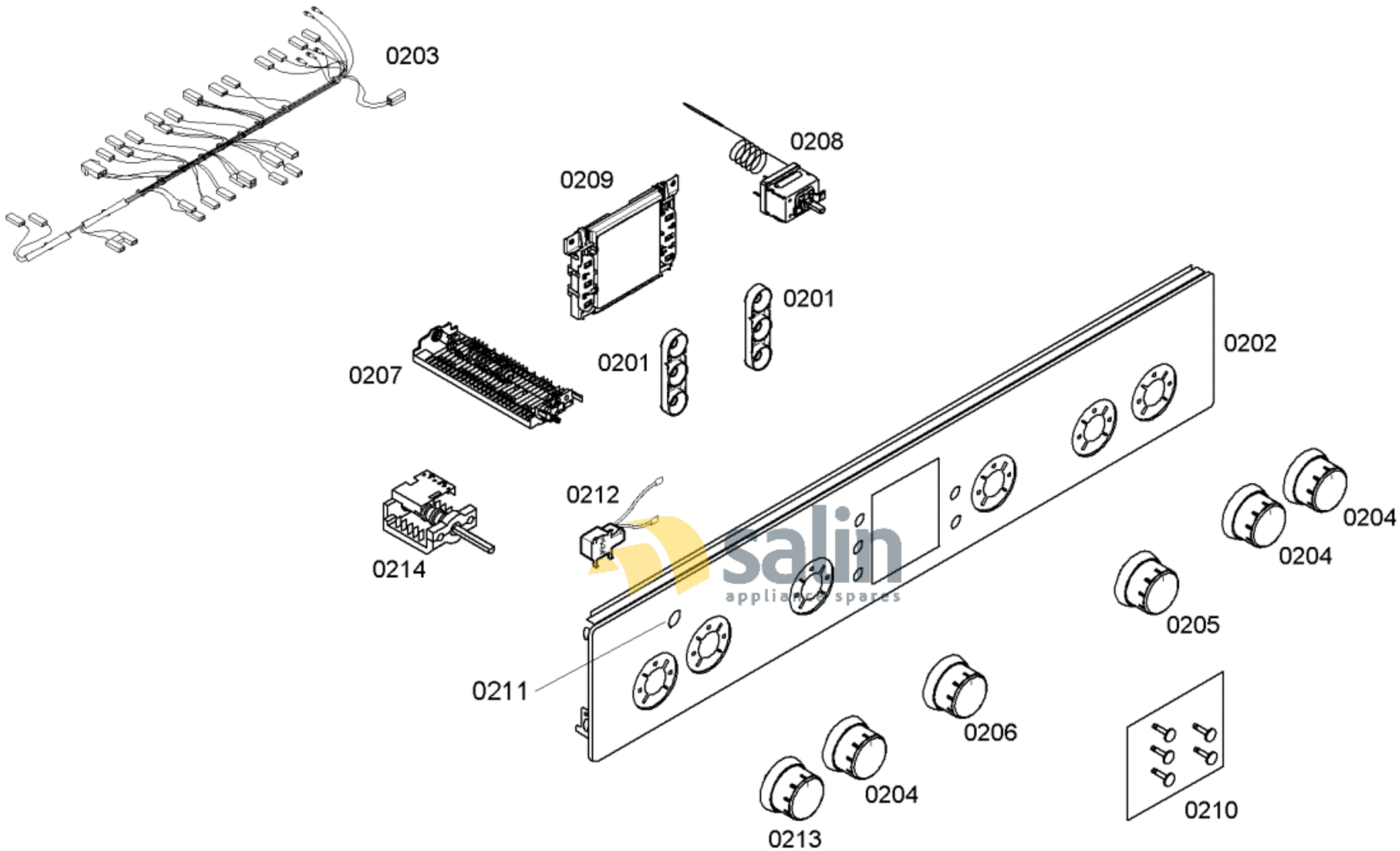

58300000149979 aet 000 a 2/6

FAMILY : HGV74D350T

MODEL NO: HGV74D350T/09

Check Position No/Part No or Replacement No

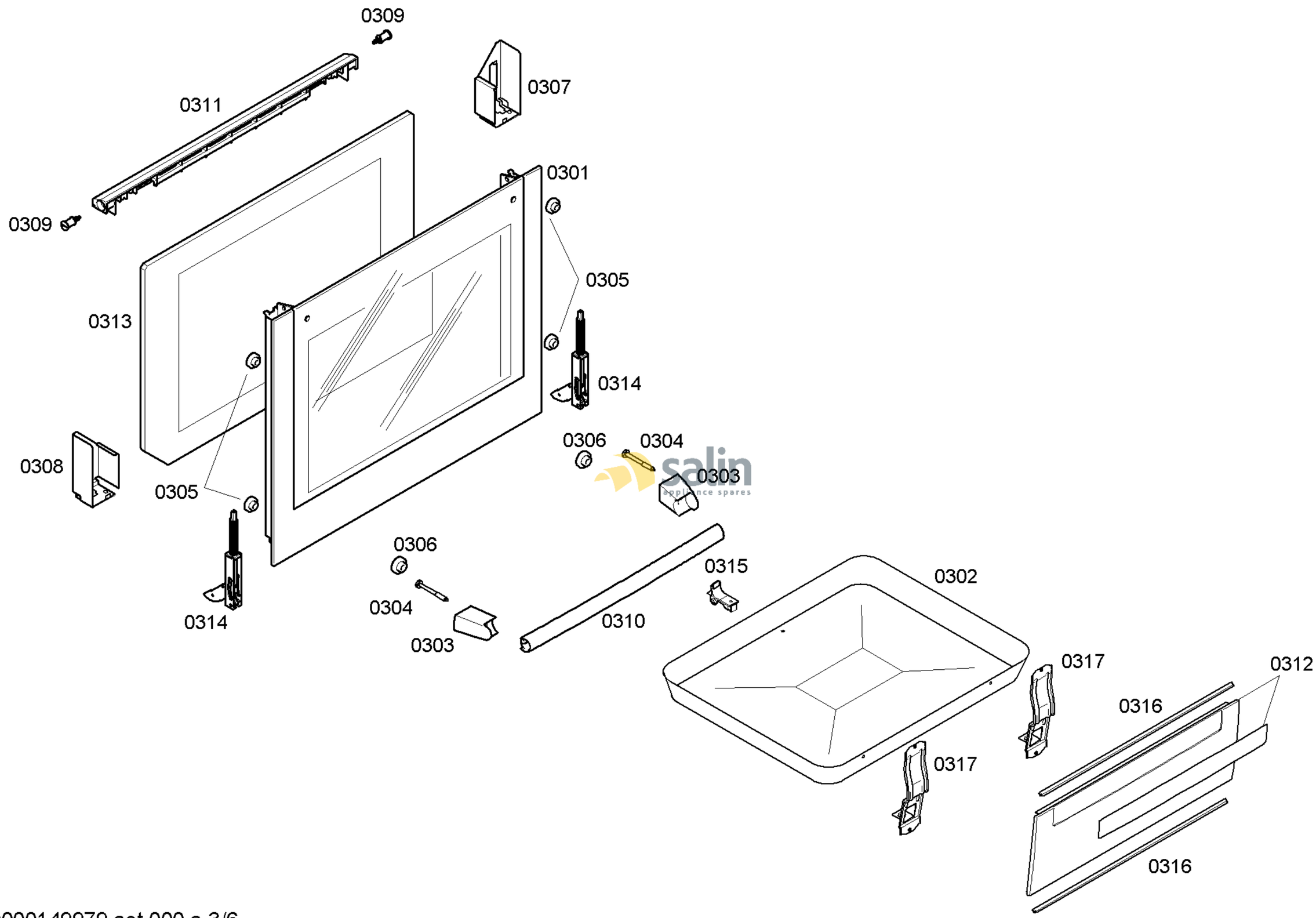

58300000149979 aet 000 a 3/6

FAMILY : HGV74D350T
MODEL NO: HGV74D350T/09
Check Position No/Part No or Replacement No

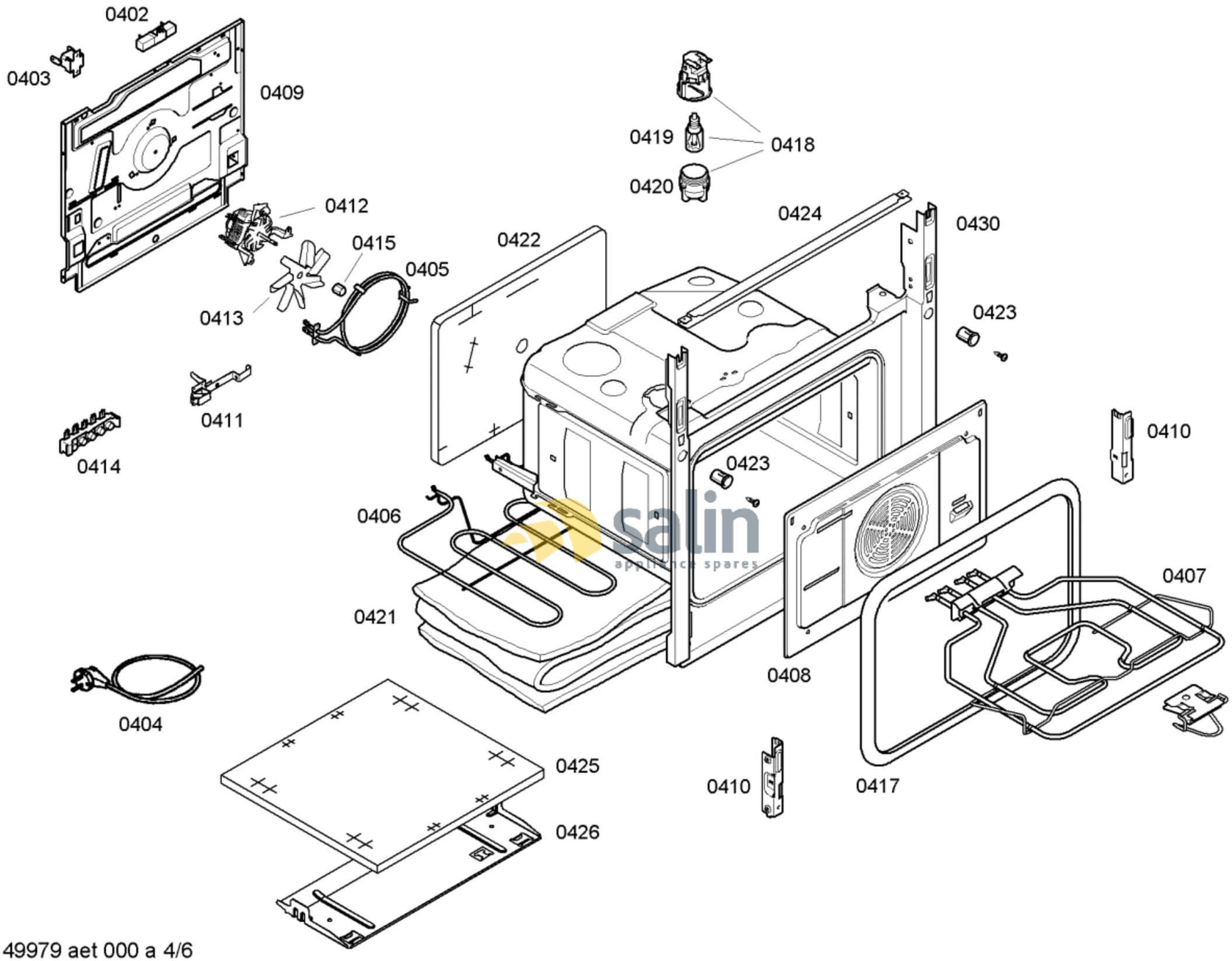

58300000149979 aet 000 a 4/6

FAMILY : HGV74D350T

MODEL NO: HGV74D350T/09

Check Position No/Part No or Replacement No

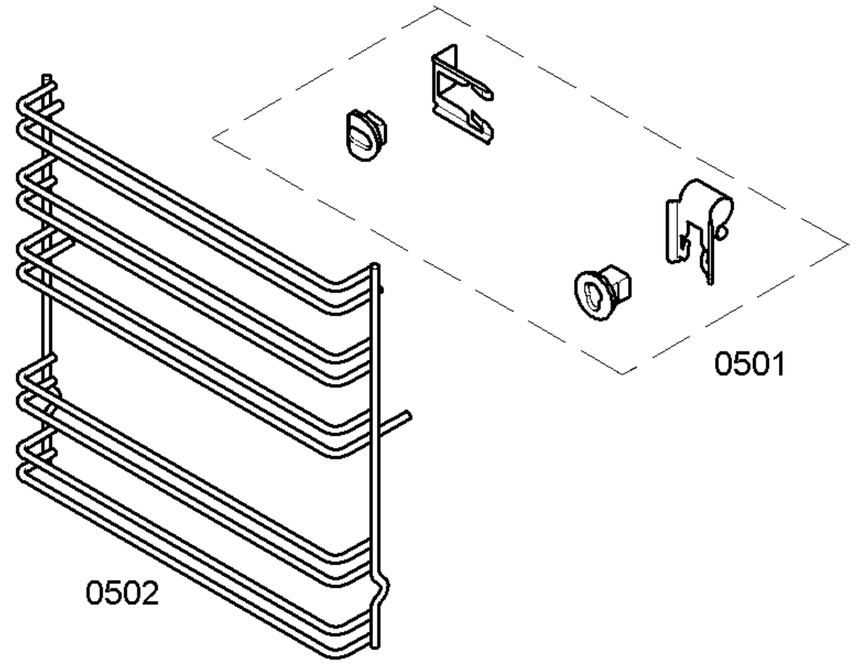

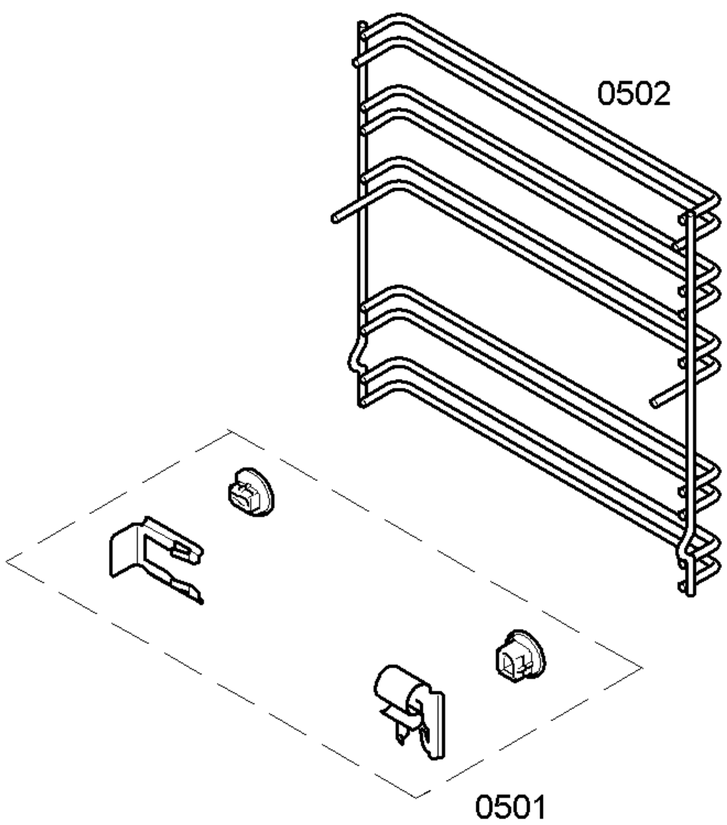

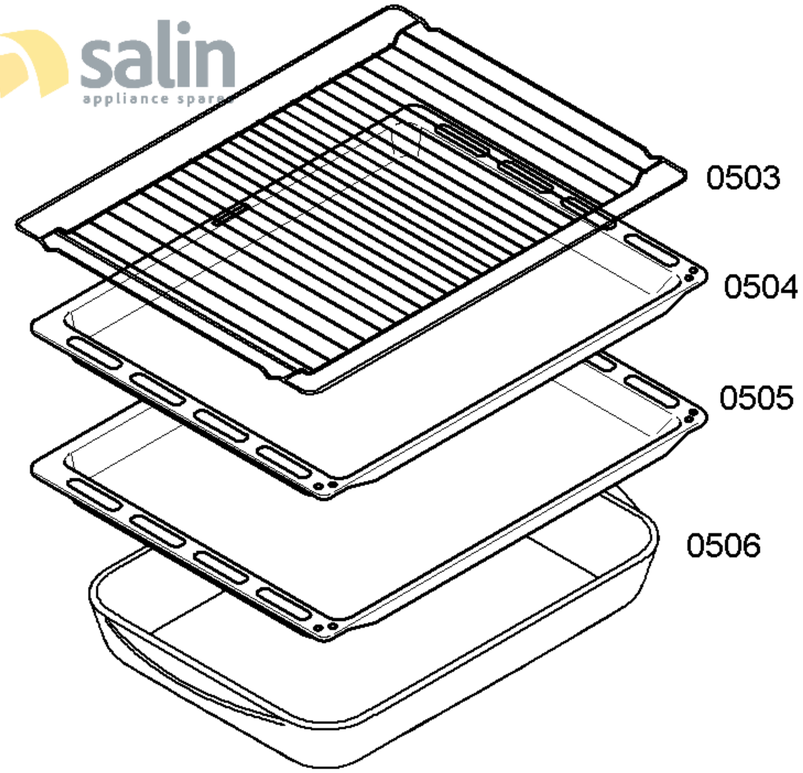

salin
appliance spare

58300000149979 aet 000 a 5/6

FAMILY : HGV74D350T
MODEL NO: HGV74D350T/09
Check Position No/Part No or Replacement No

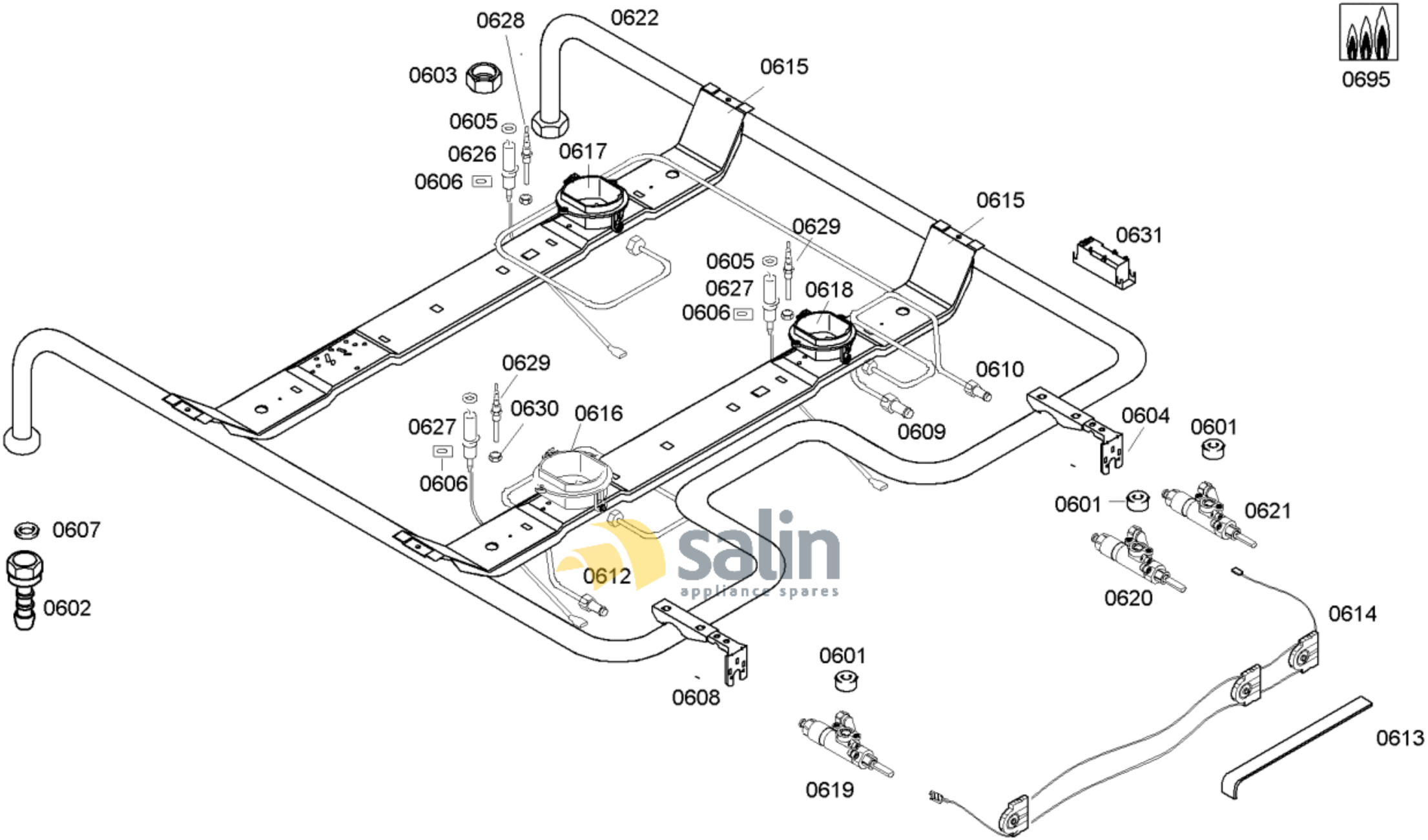

salin
appliance spares

58300000149979 aet 000 a 6/6

FAMILY : HGV74D350T

MODEL NO: HGV74D350T/09

Check Position No/Part No or Replacement No