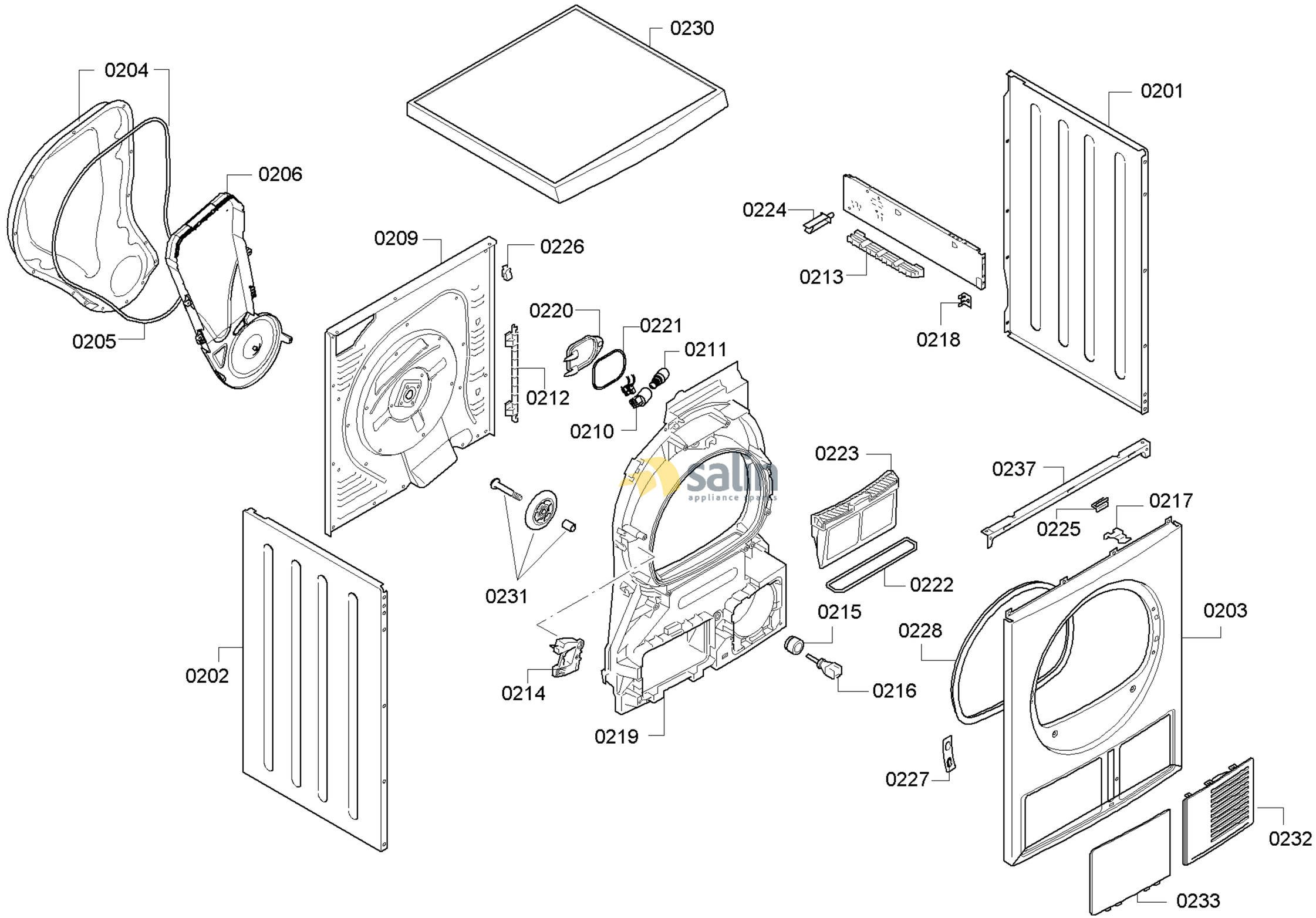

58300000139630 aet 000 d 2/5

FAMILY : WTW865C0NL
MODEL NO: WTW865C0NL/02
Check Position No/Part No or Replacement No

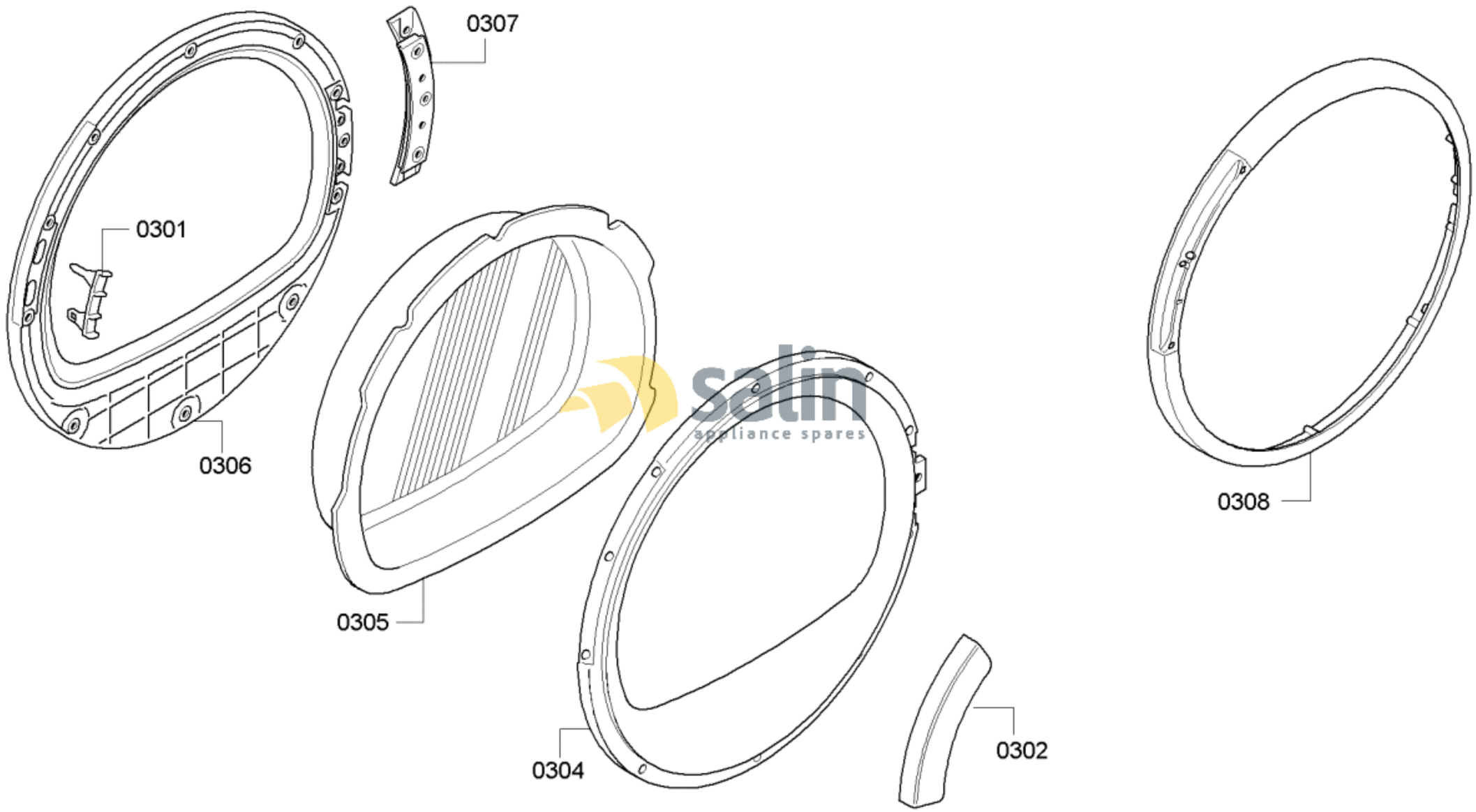

58300000139630 aet 000 d 3/5

FAMILY : WTW865C0NL

MODEL NO: WTW865C0NL/02

Check Position No/Part No or Replacement No

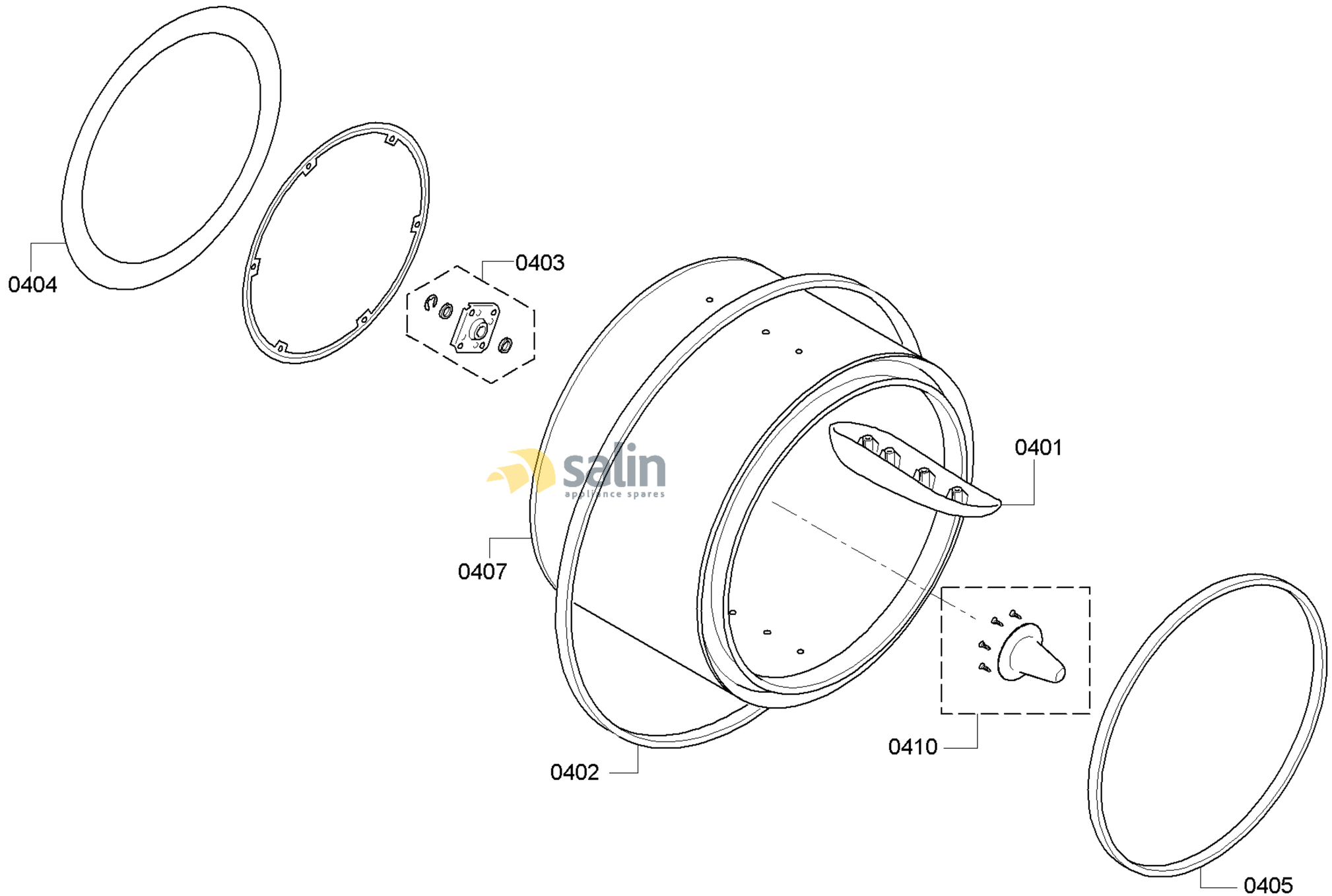

58300000139630 aet 000 d 4/5

FAMILY : WTW865C0NL
MODEL NO: WTW865C0NL/02
Check Position No/Part No or Replacement No

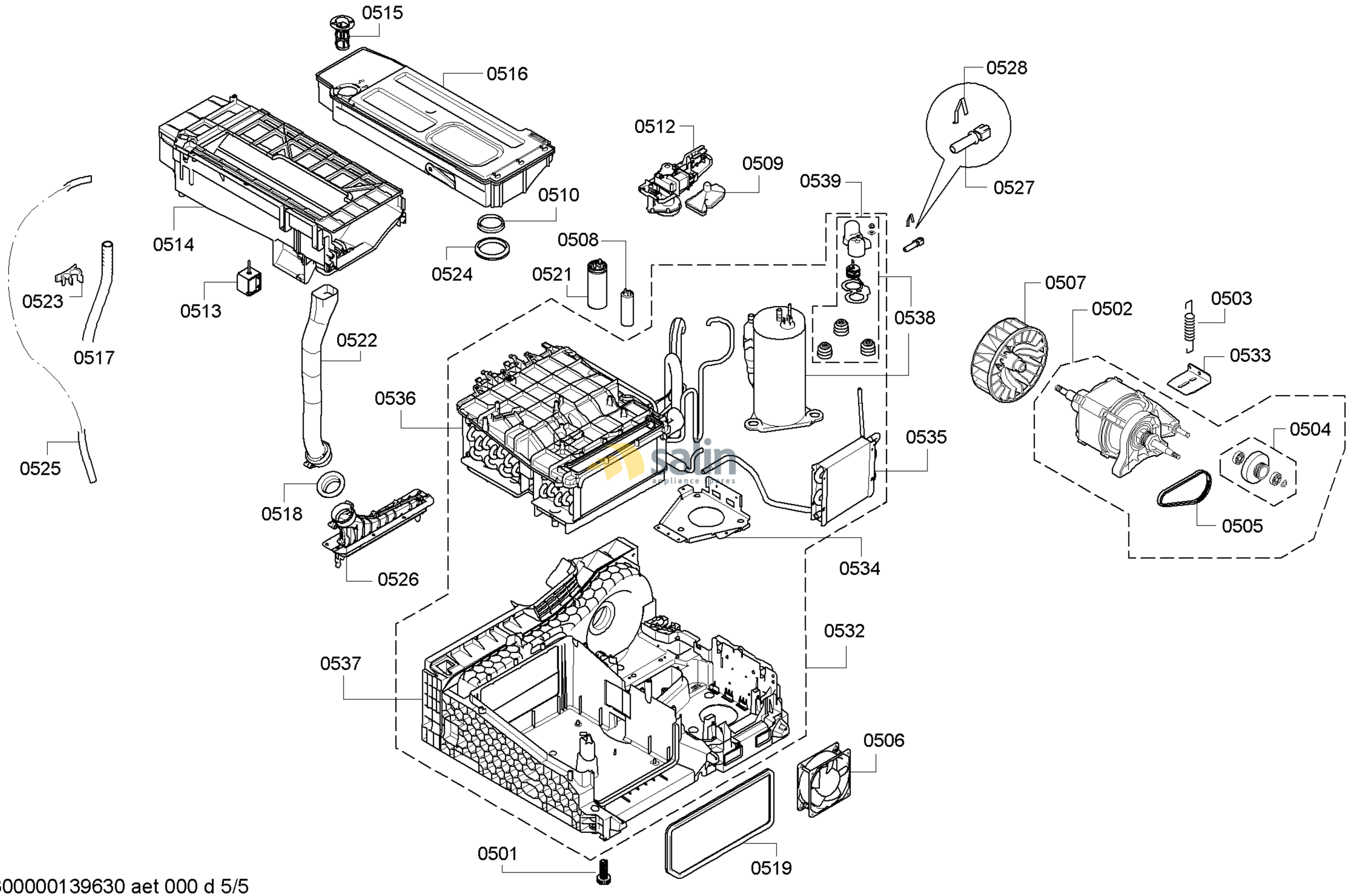

58300000139630 aet 000 d 5/5

FAMILY : WTW865C0NL
MODEL NO: WTW865C0NL/02
Check Position No/Part No or Replacement No