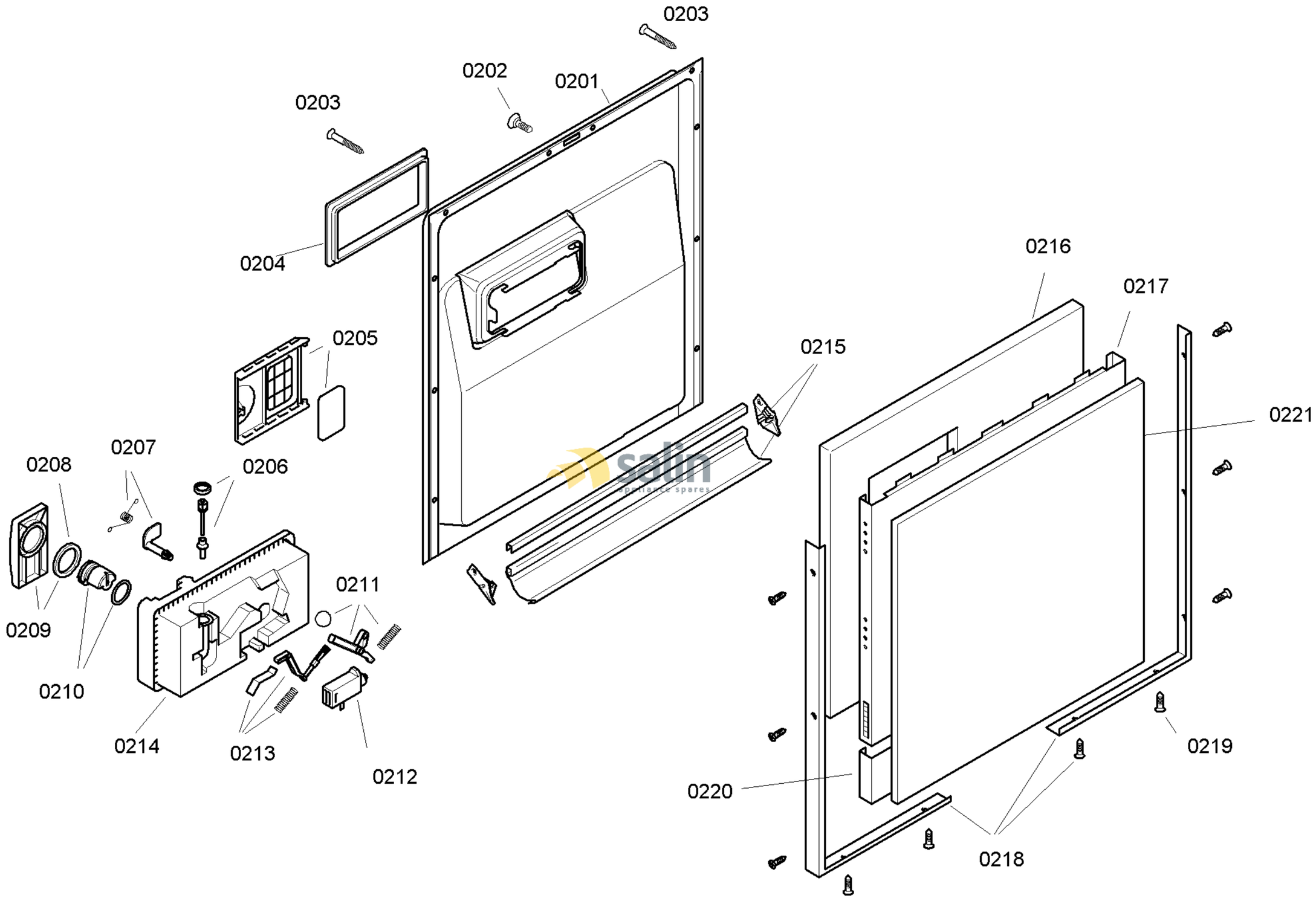

58300000119528 aet 000 b 2/6

FAMILY : SGU45E16II
MODEL NO: SGU45E16II/75
Check Position No/Part No or Replacement No

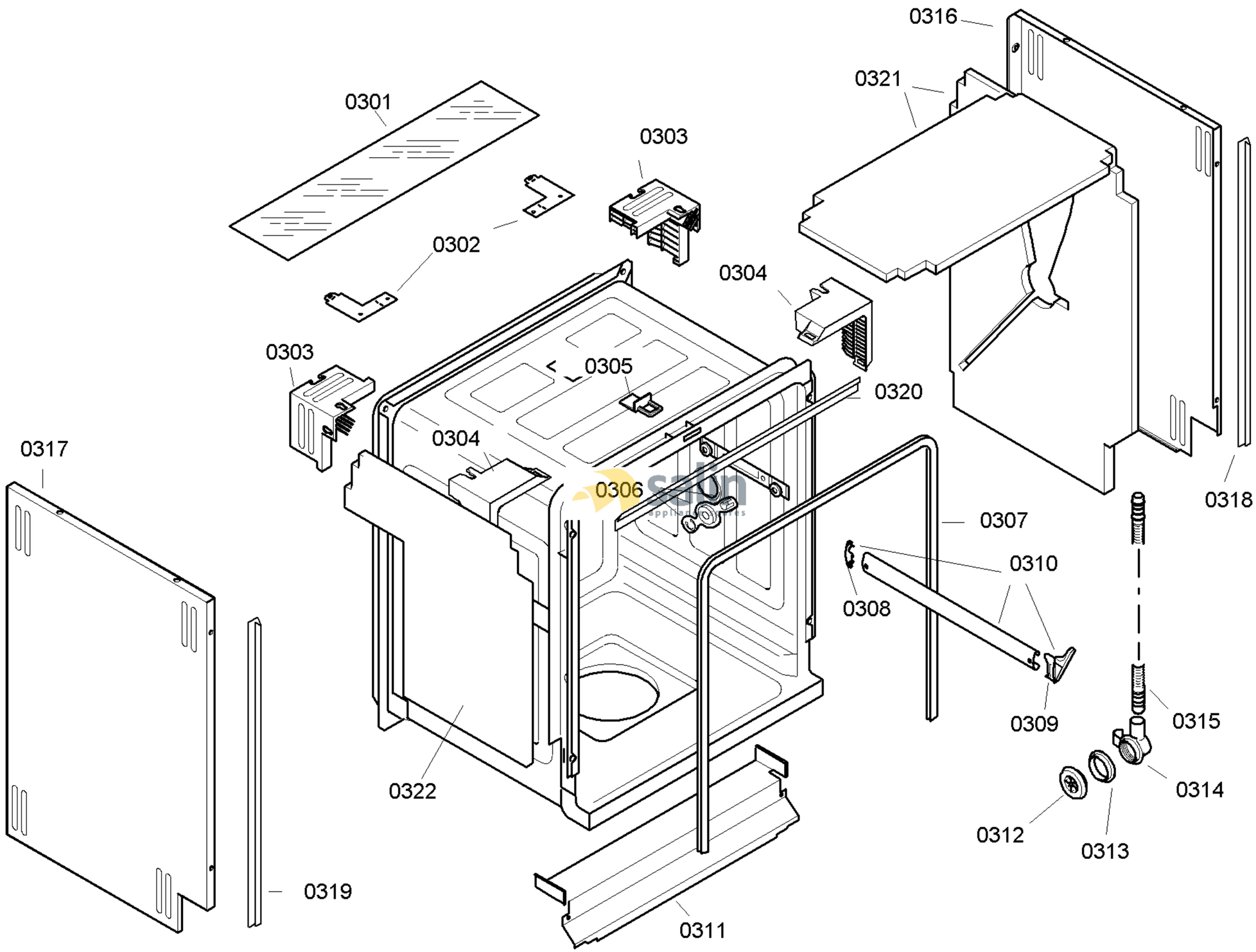

58300000119528 aet 000 b 3/6

FAMILY : SGU45E16II
MODEL NO: SGU45E16II/75
Check Position No/Part No or Replacement No

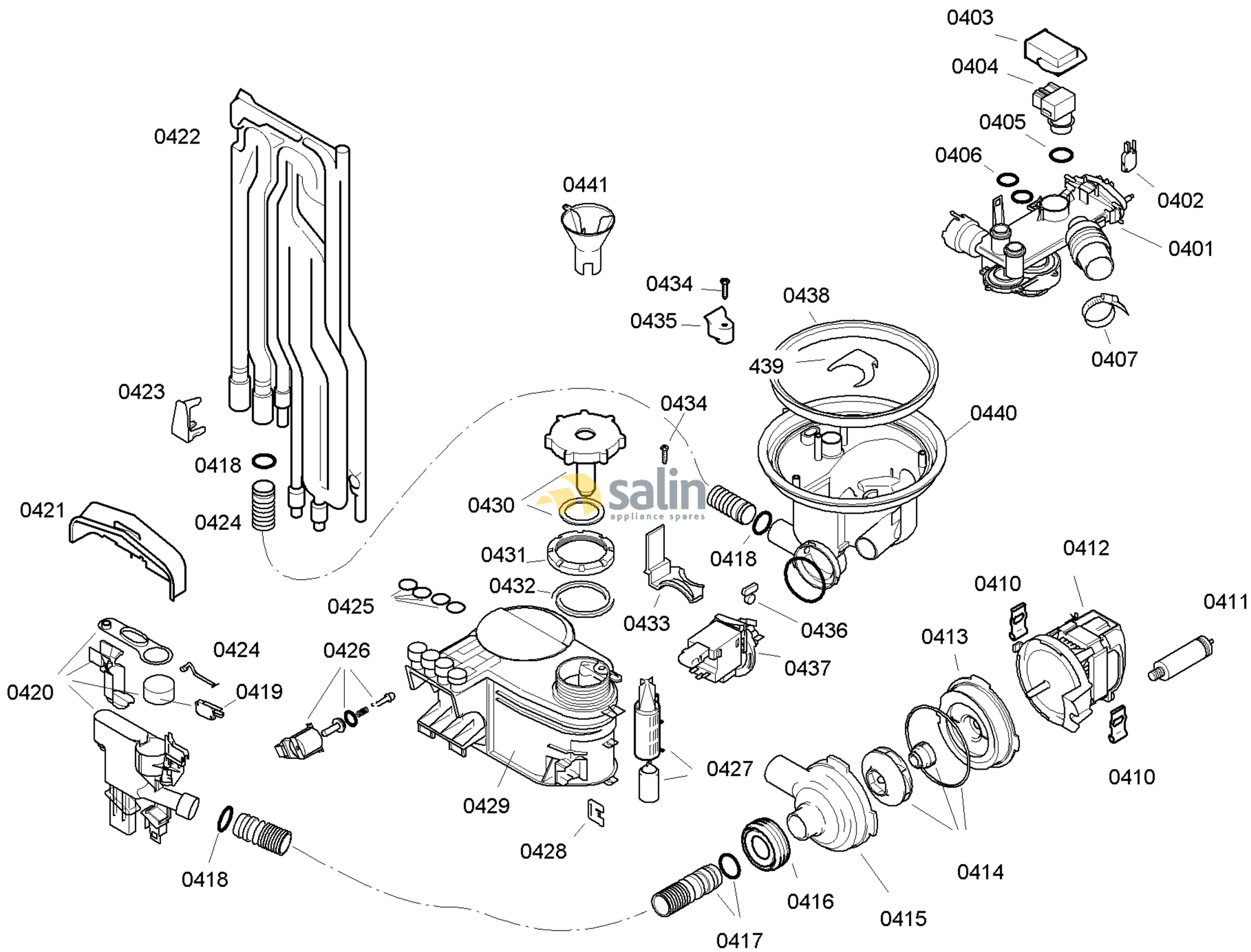

58300000119528 aet 000 b 4/6

FAMILY : SGU45E16II
MODEL NO: SGU45E16II/75
Check Position No/Part No or Replacement No

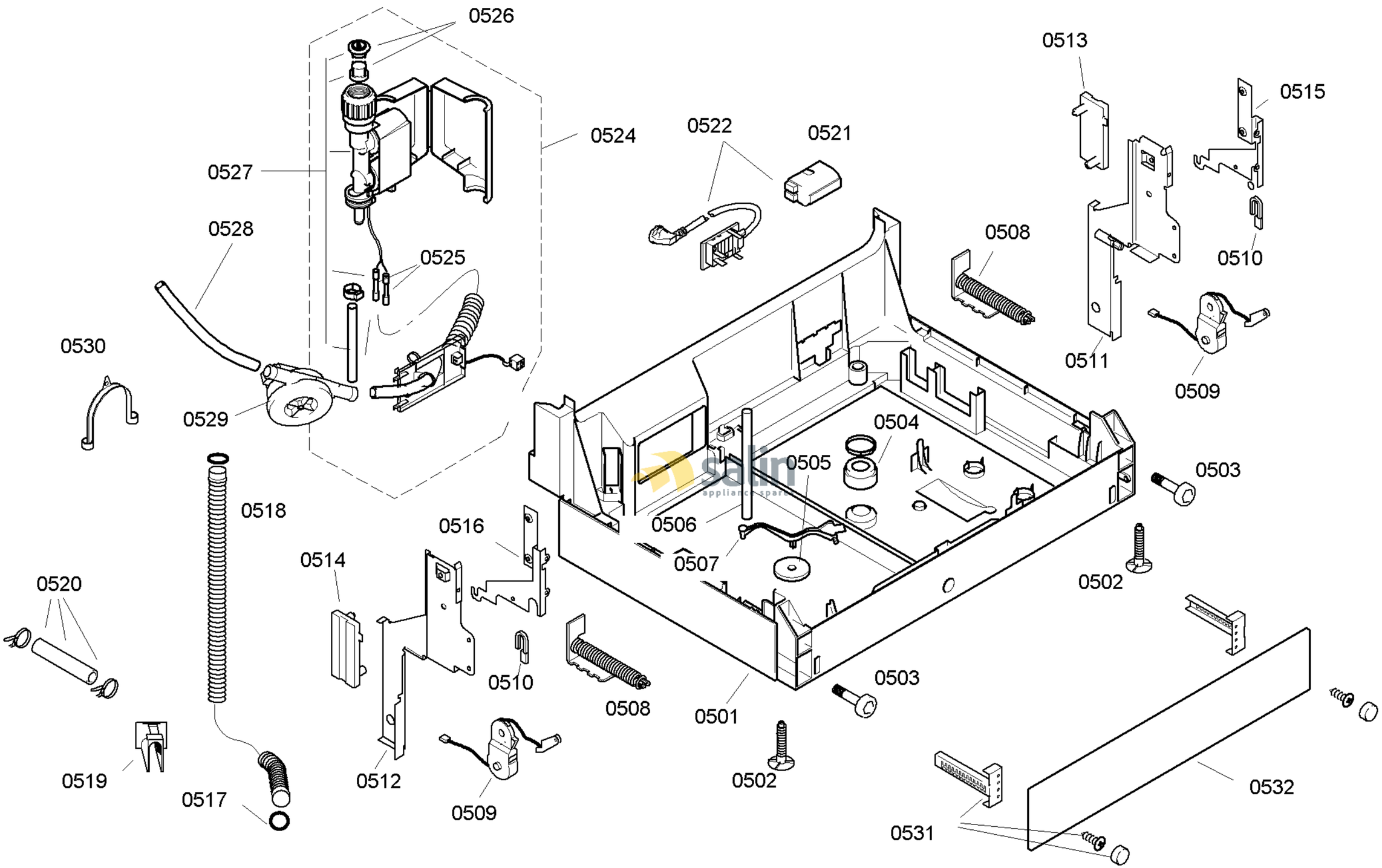

58300000119528 aet 000 b 5/6

FAMILY : SGU45E16II
MODEL NO: SGU45E16II/75
Check Position No/Part No or Replacement No

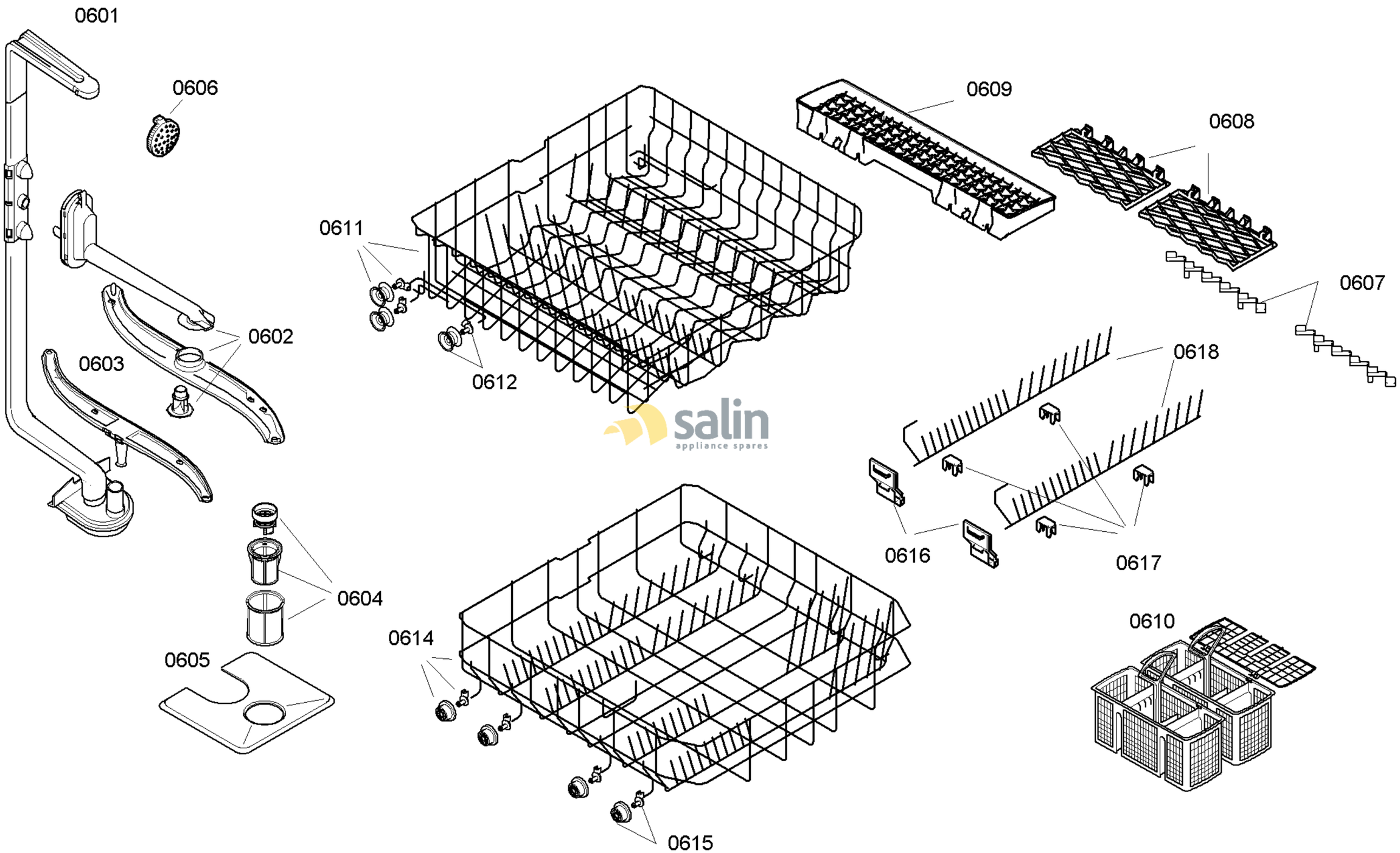

58300000119528 aet 000 b 6/6

FAMILY : SGU45E16II
MODEL NO: SGU45E16II/75
Check Position No/Part No or Replacement No