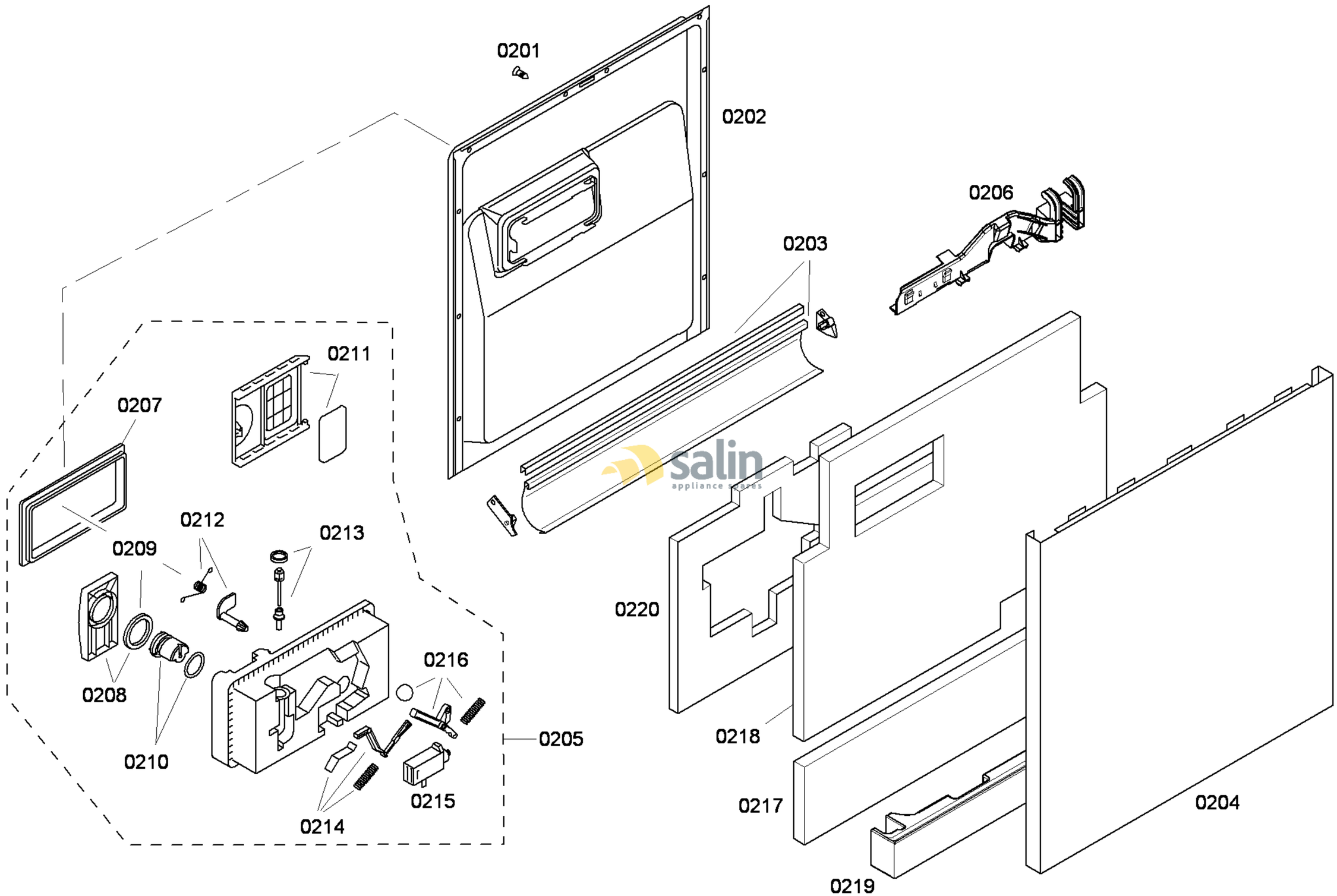

58300000146167 aet 000 d 2/6

FAMILY : SHE55C06UC
MODEL NO: SHE55C06UC/57
Check Position No/Part No or Replacement No

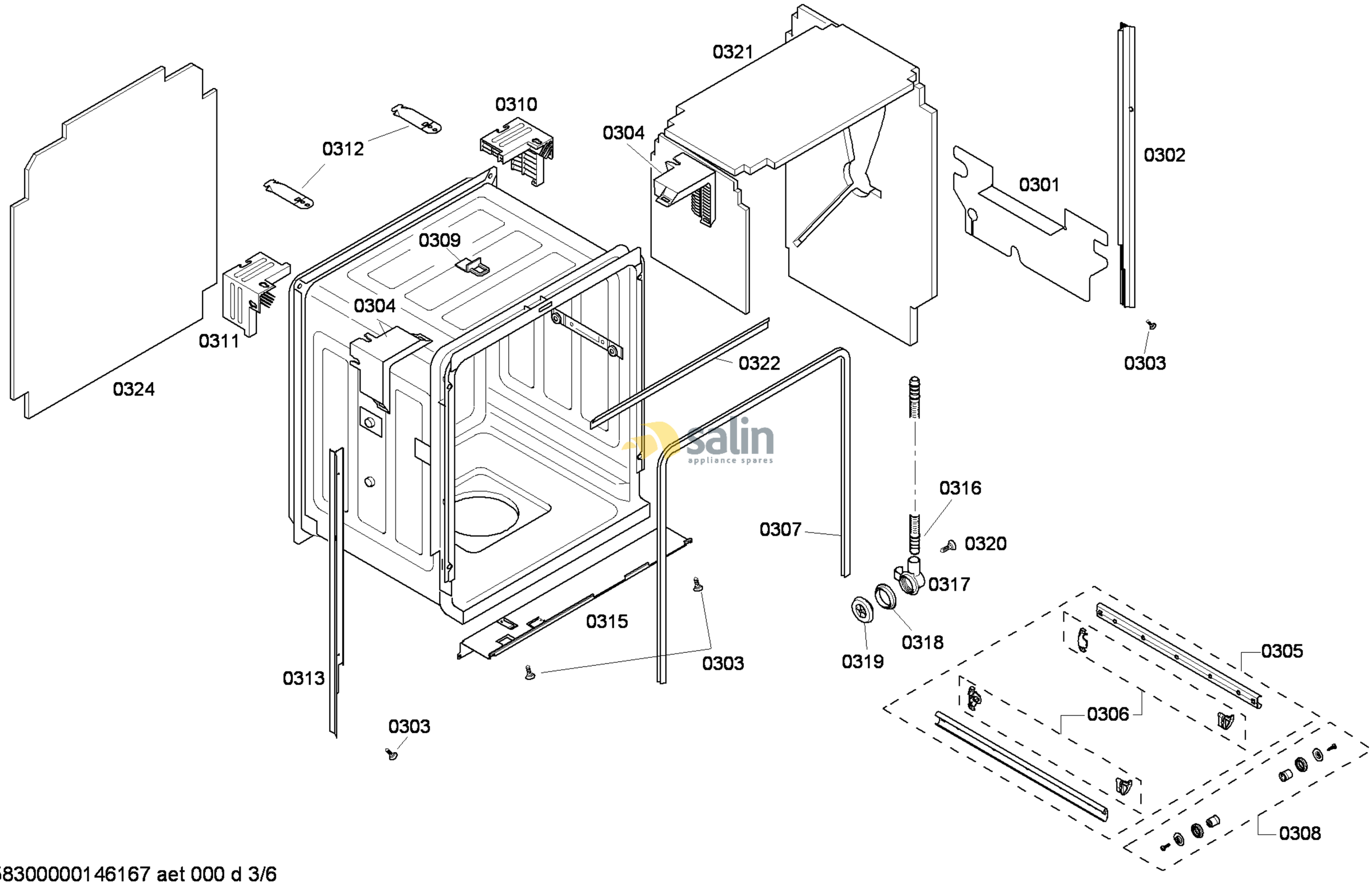

58300000146167 aet 000 d 3/6

FAMILY : SHE55C06UC
MODEL NO: SHE55C06UC/57
Check Position No/Part No or Replacement No

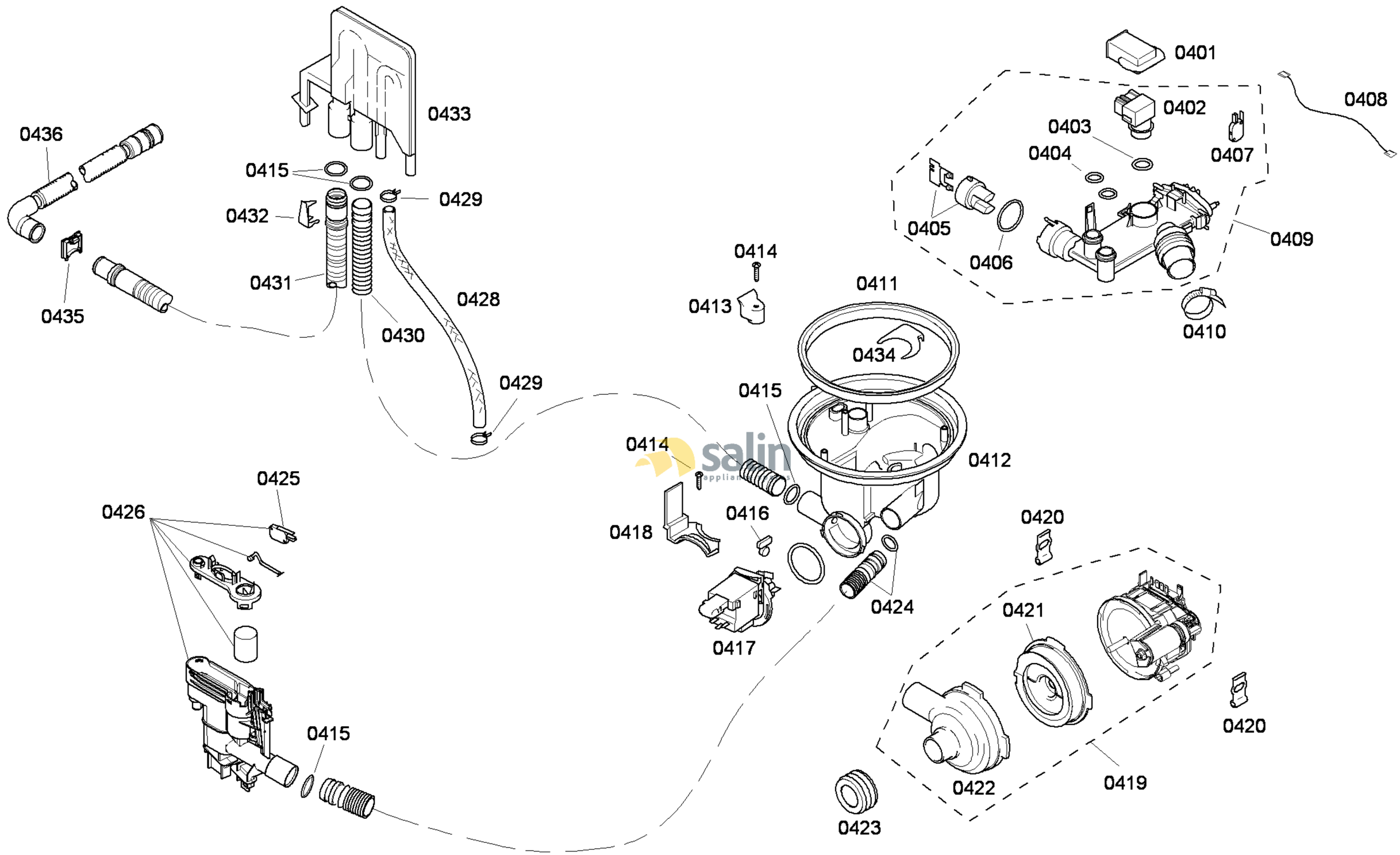

58300000146167 aet 000 d 4/6

FAMILY : SHE55C06UC
MODEL NO: SHE55C06UC/57
Check Position No/Part No or Replacement No

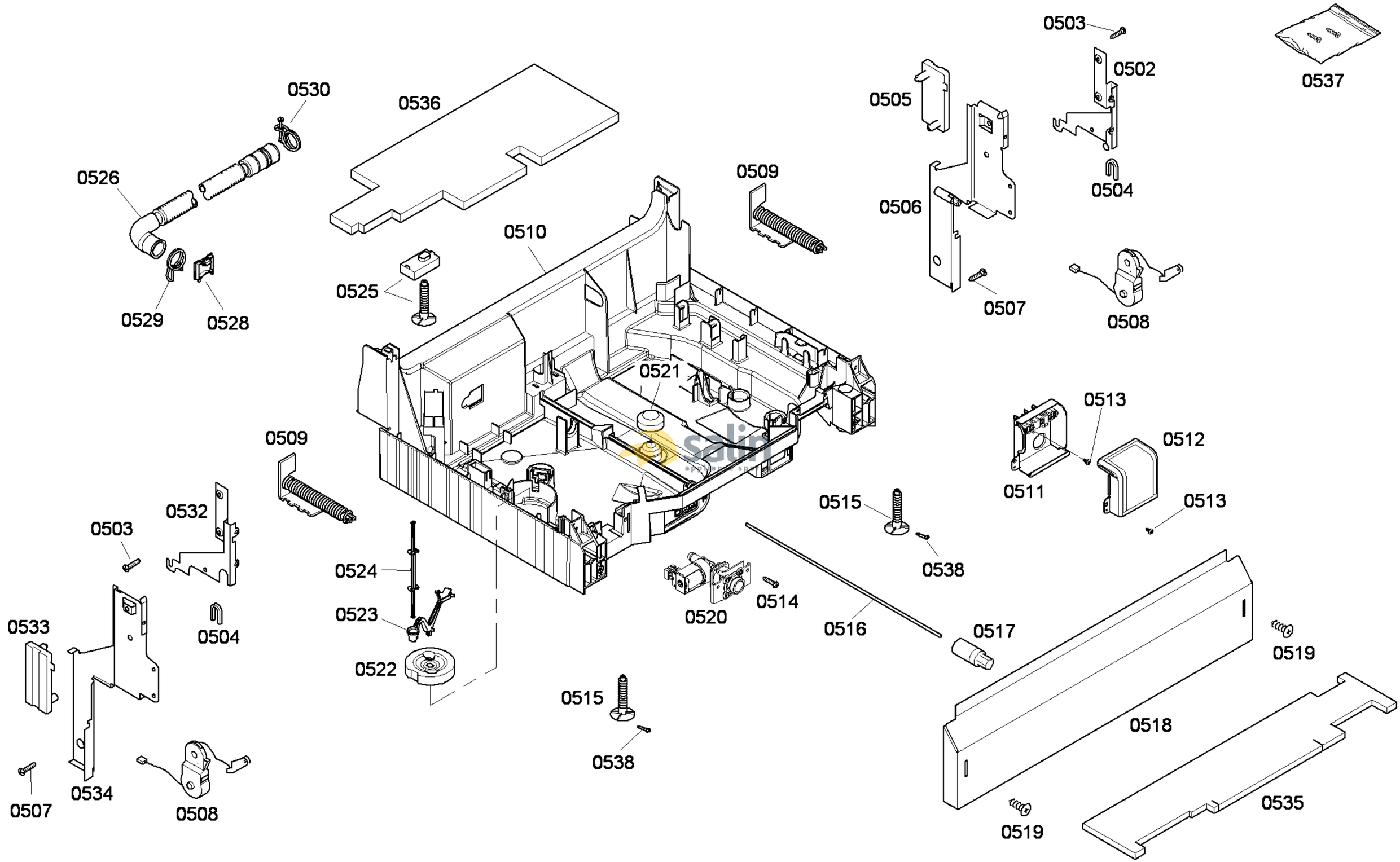

58300000146167 aet 000 d 5/6

FAMILY : SHE55C06UC
MODEL NO: SHE55C06UC/57
Check Position No/Part No or Replacement No

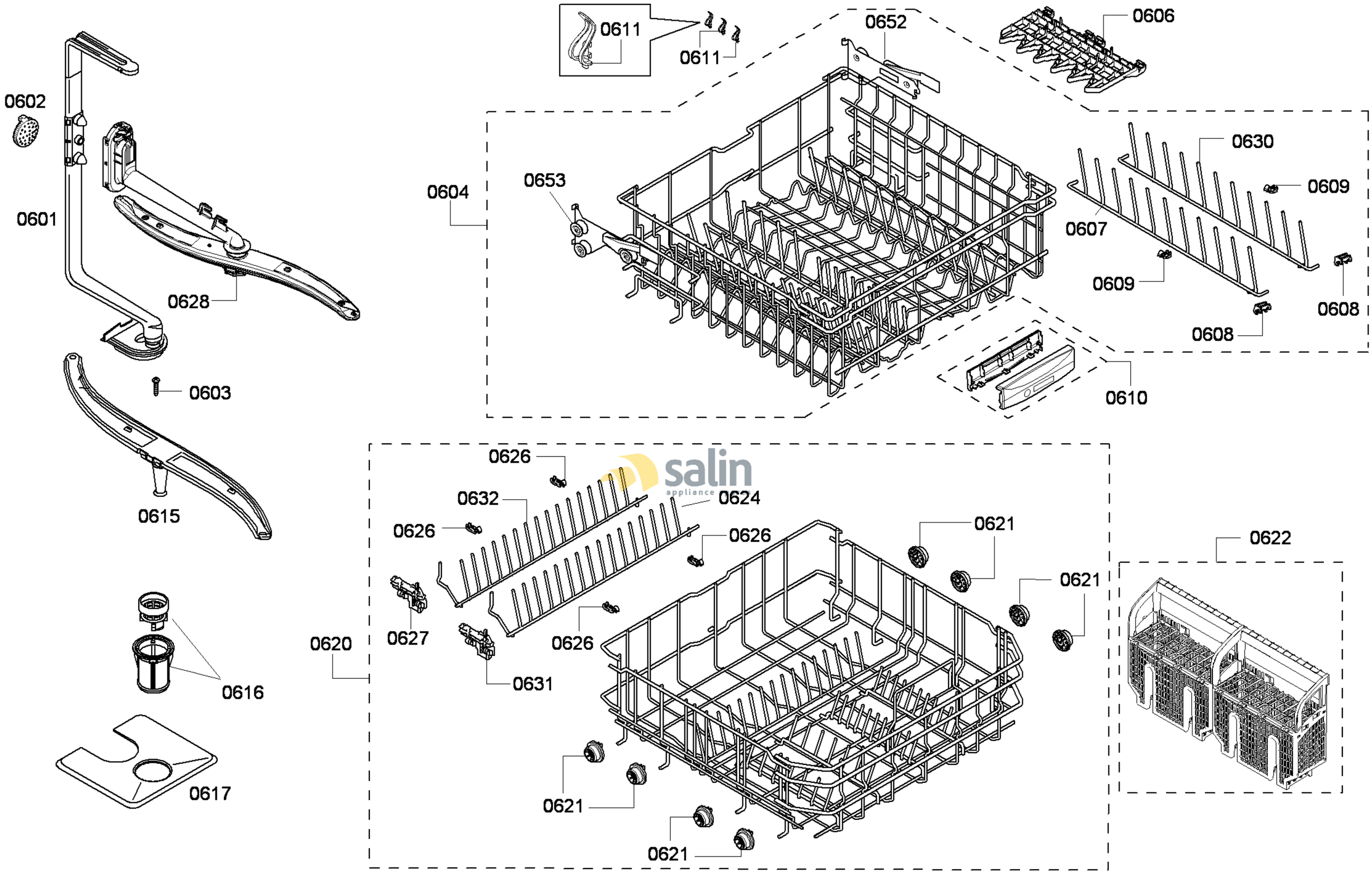

58300000146167 aet 000 d 6/6

FAMILY : SHE55C06UC
MODEL NO: SHE55C06UC/57
Check Position No/Part No or Replacement No