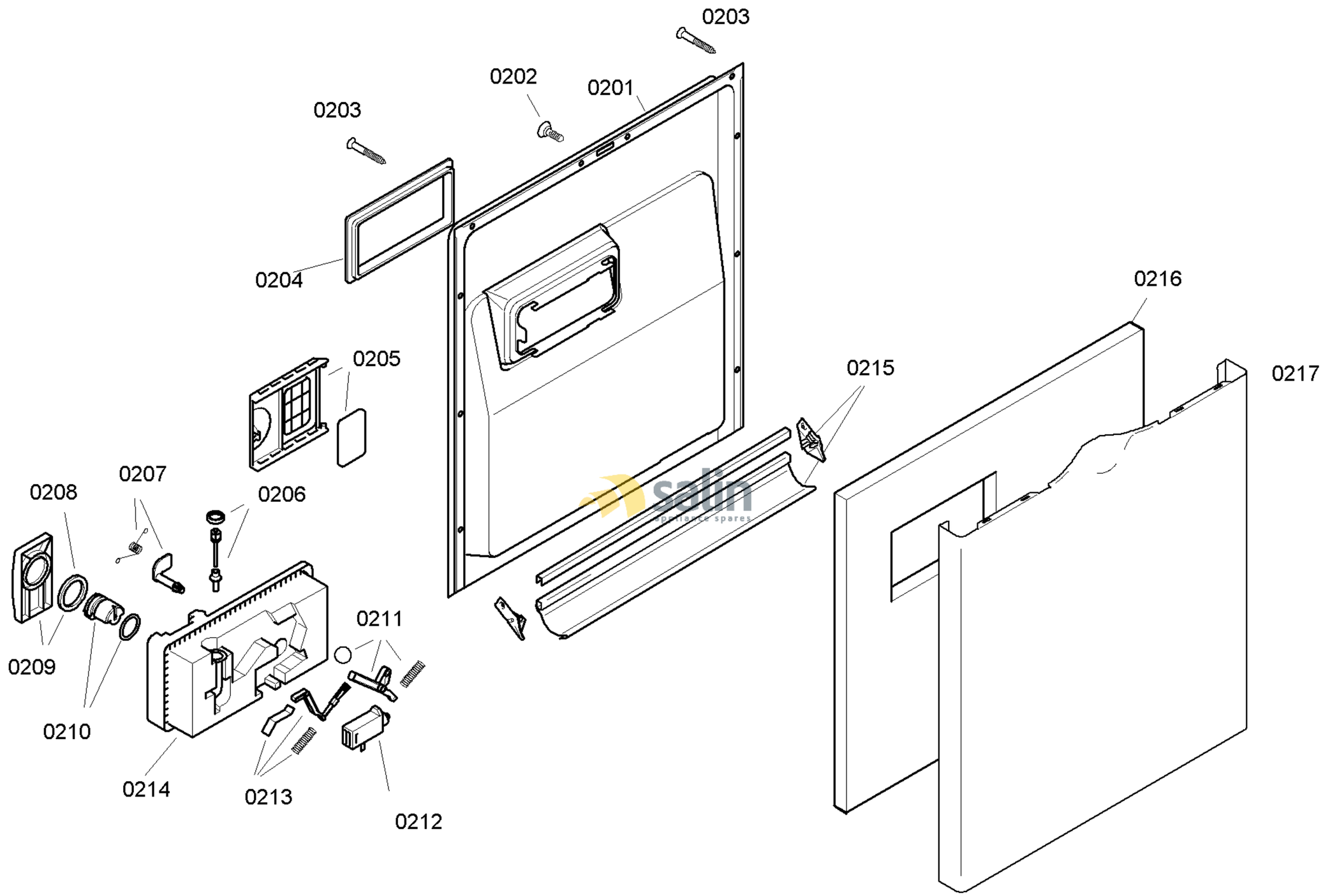

58300000130447 aet 000 a 2/6

FAMILY : SGS45M58II
MODEL NO: SGS45M58II/86
Check Position No/Part No or Replacement No

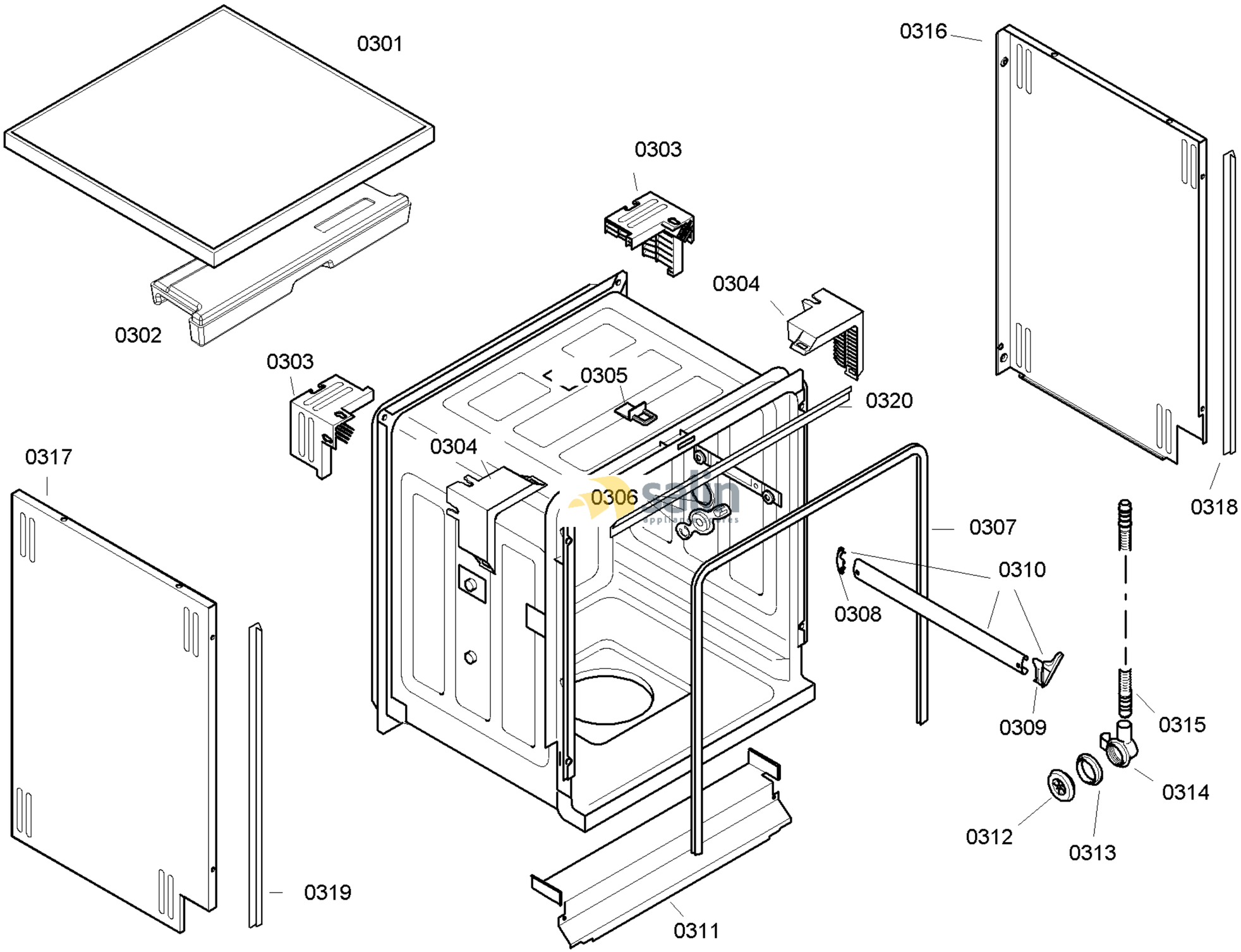

58300000130447 aet 000 a 3/6

FAMILY : SGS45M58II
MODEL NO: SGS45M58II/86
Check Position No/Part No or Replacement No

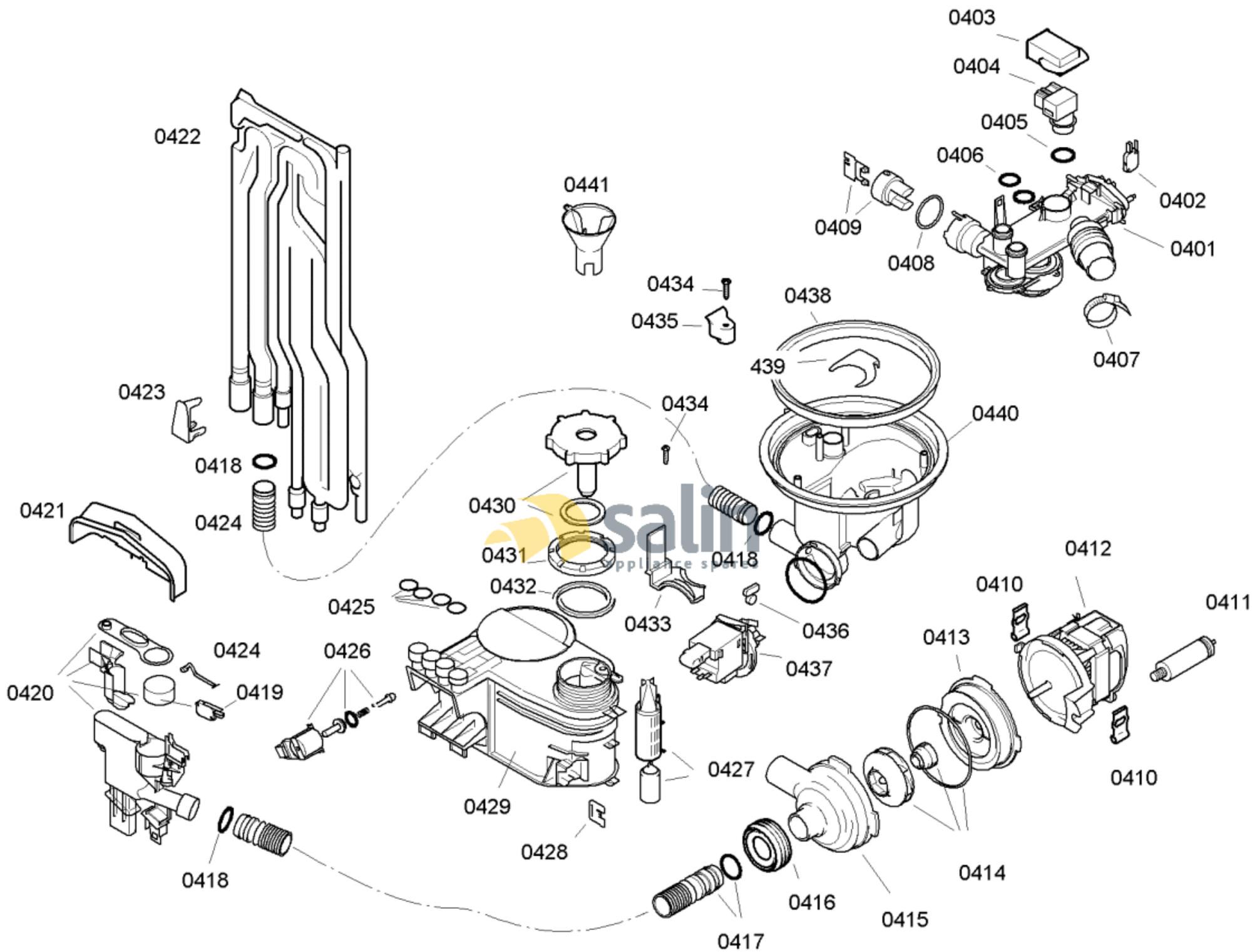

58300000130447 aet 000 a 4/6

FAMILY : SGS45M58II

MODEL NO: SGS45M58II/86

Check Position No/Part No or Replacement No

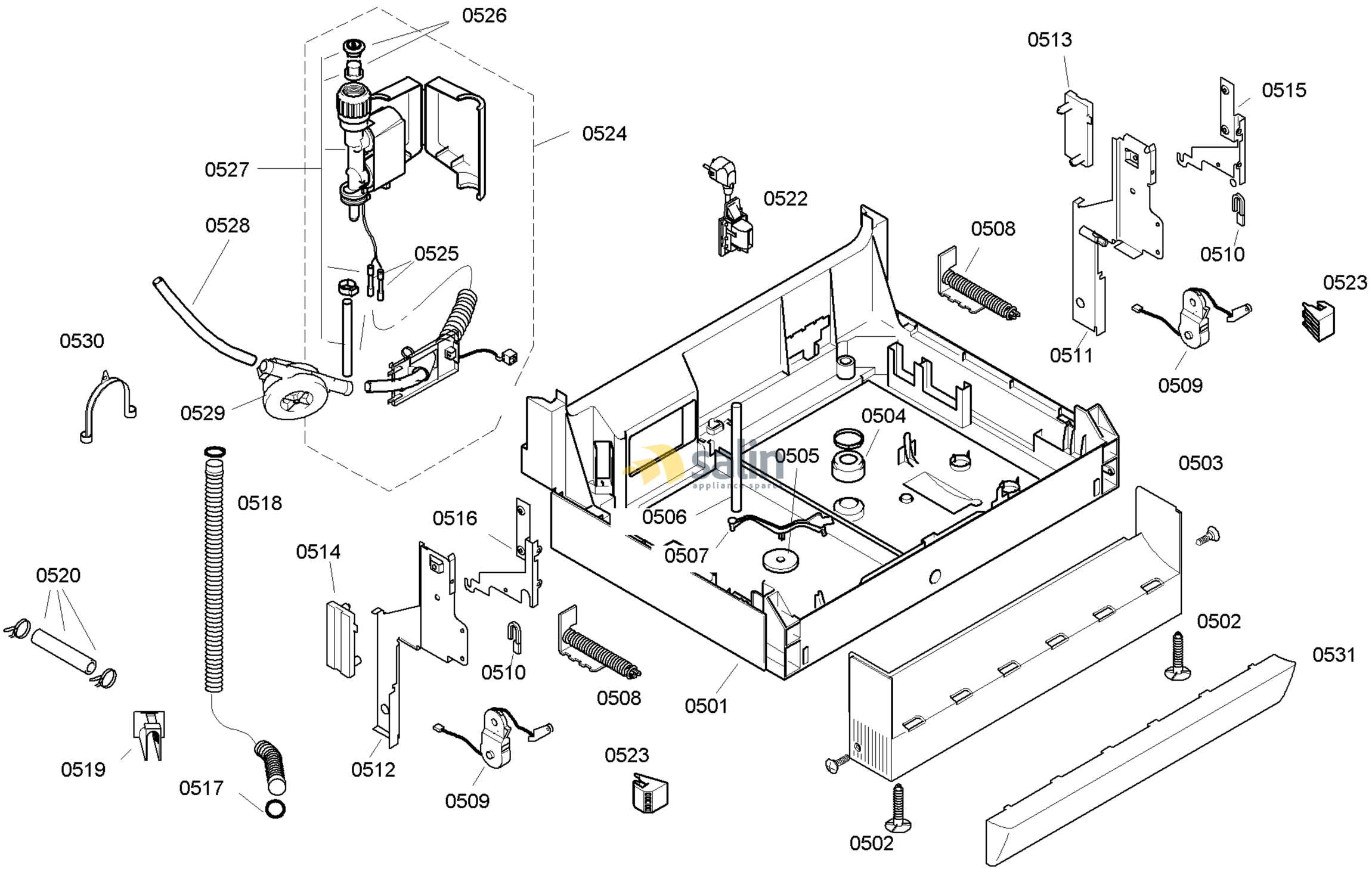

58300000130447 aet 000 a 5/6

FAMILY : SGS45M58II
MODEL NO: SGS45M58II/86
Check Position No/Part No or Replacement No

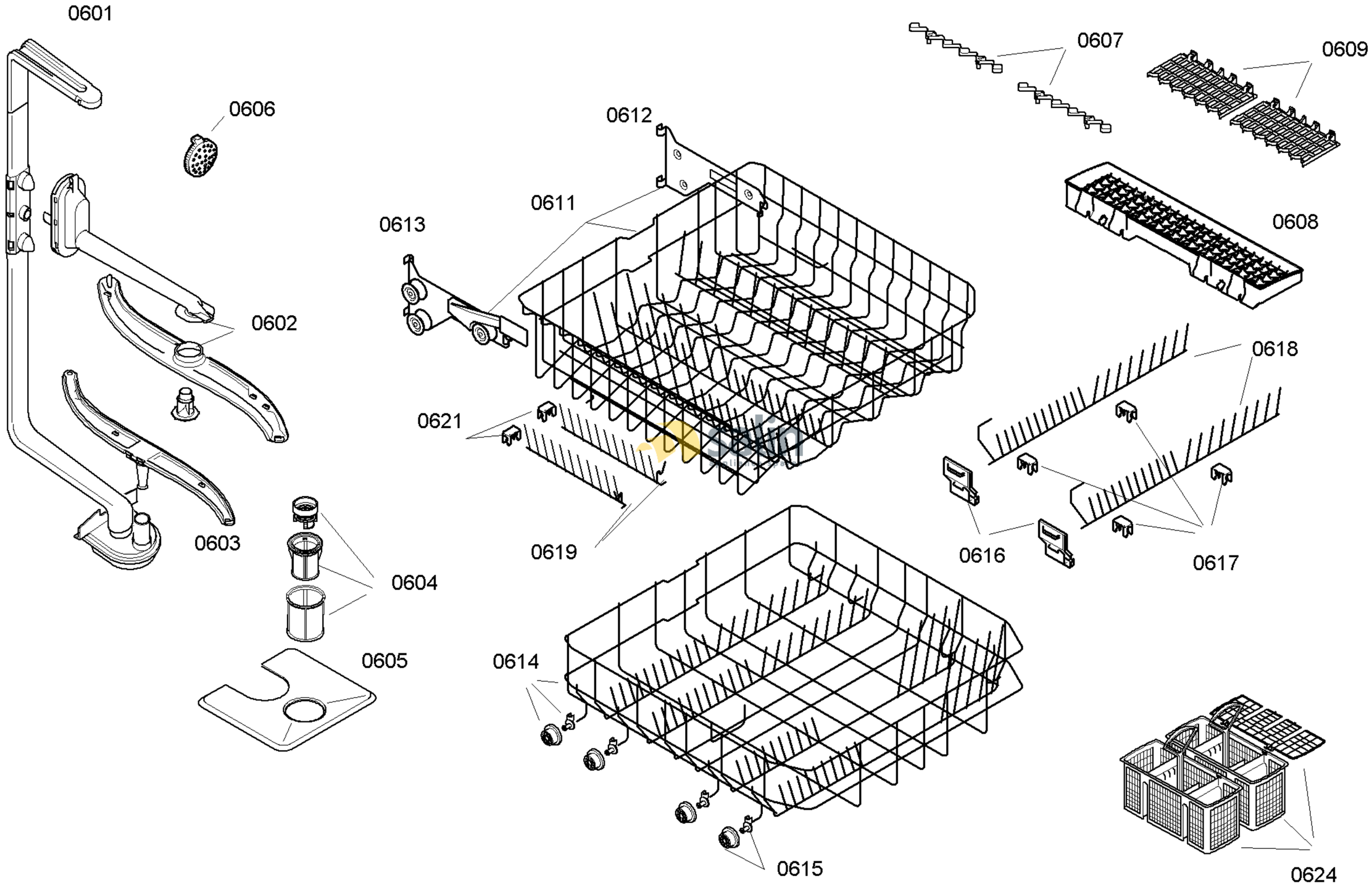

58300000130447 aet 000 a 6/6

FAMILY : SGS45M58II
MODEL NO: SGS45M58II/86
Check Position No/Part No or Replacement No