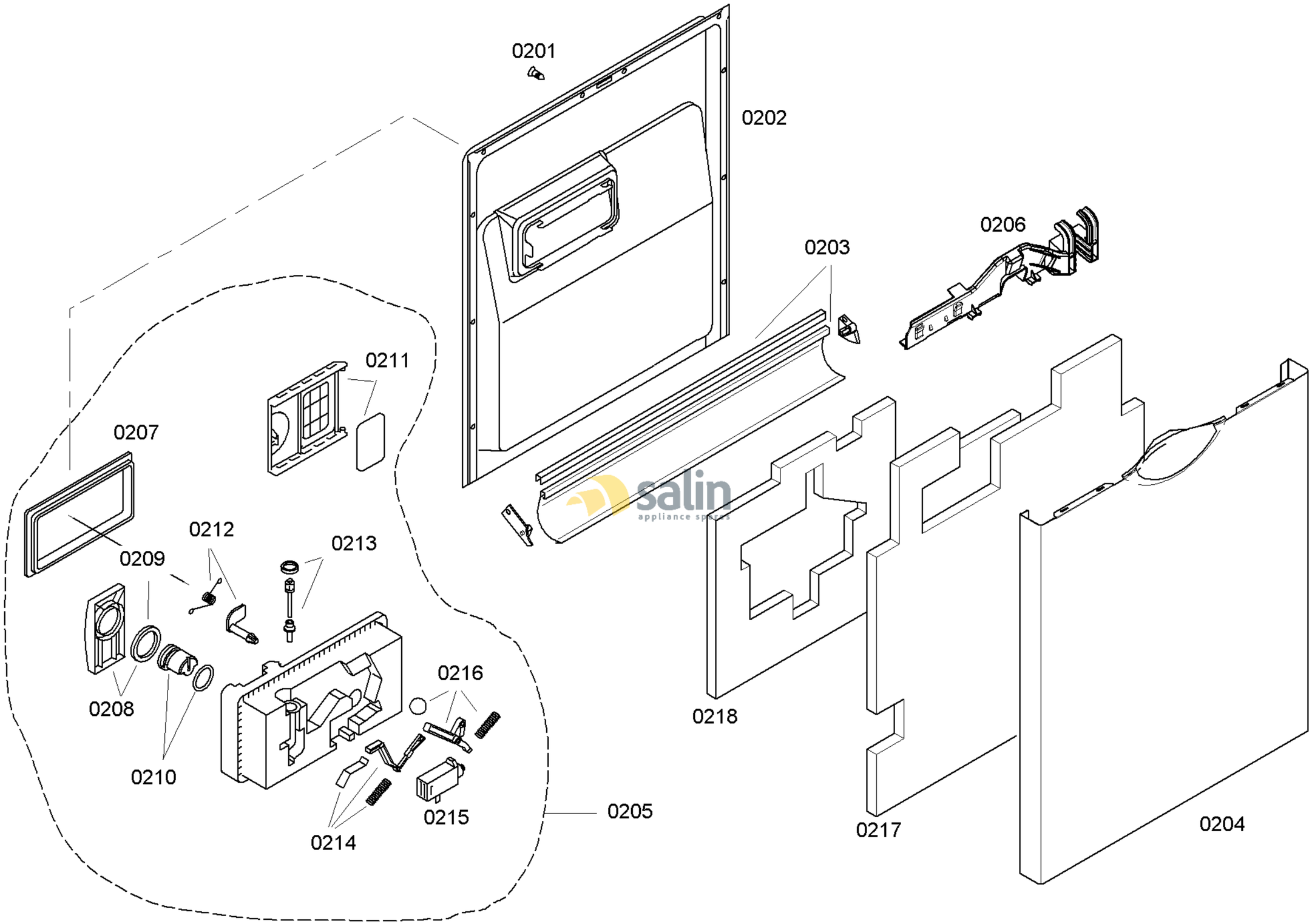

58300000121155 aet 000 c 2/6

FAMILY : SHE45C05UC
MODEL NO: SHE45C05UC/40
Check Position No/Part No or Replacement No

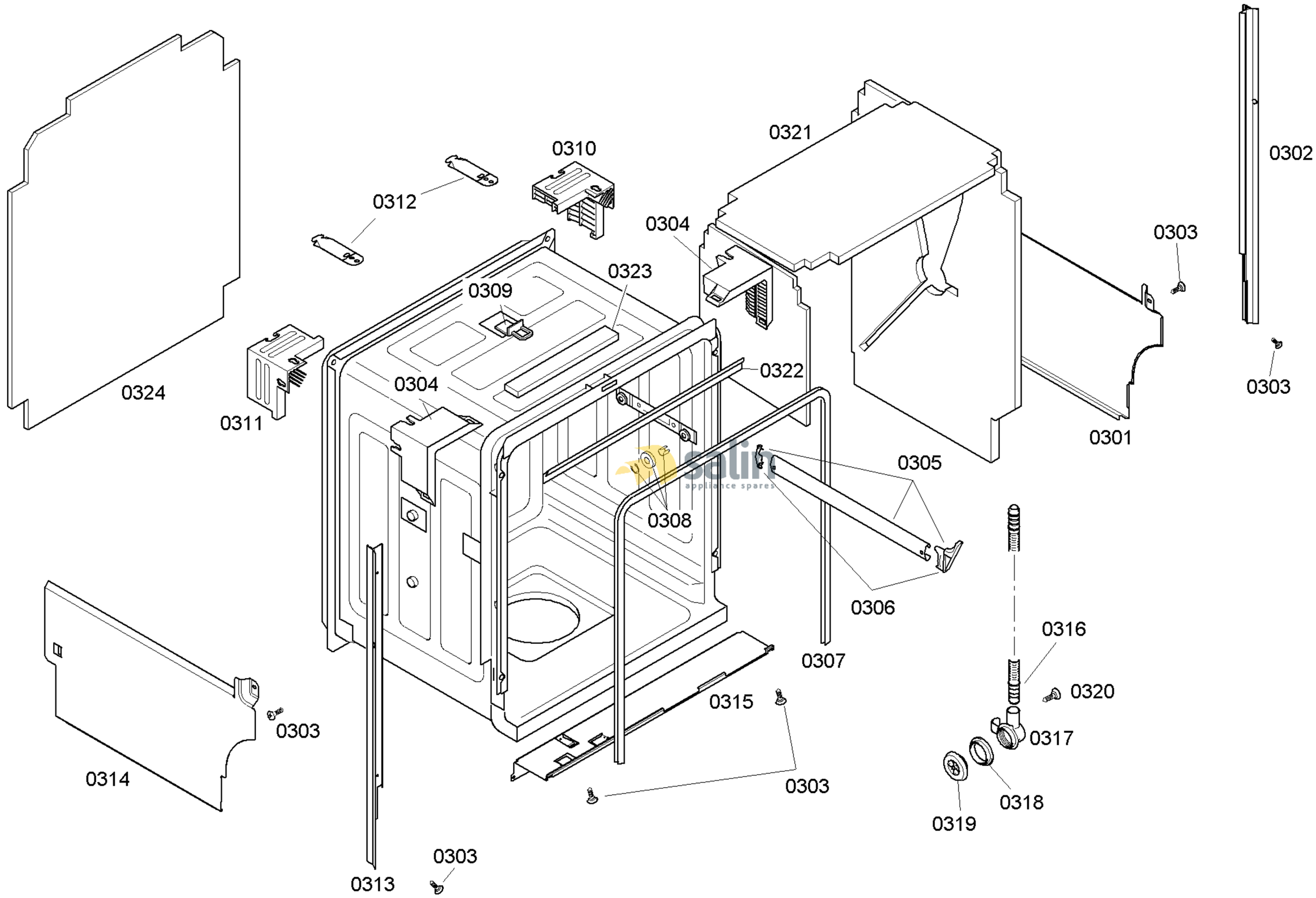

58300000121155 aet 000 c 3/6

FAMILY : SHE45C05UC
MODEL NO: SHE45C05UC/40
Check Position No/Part No or Replacement No

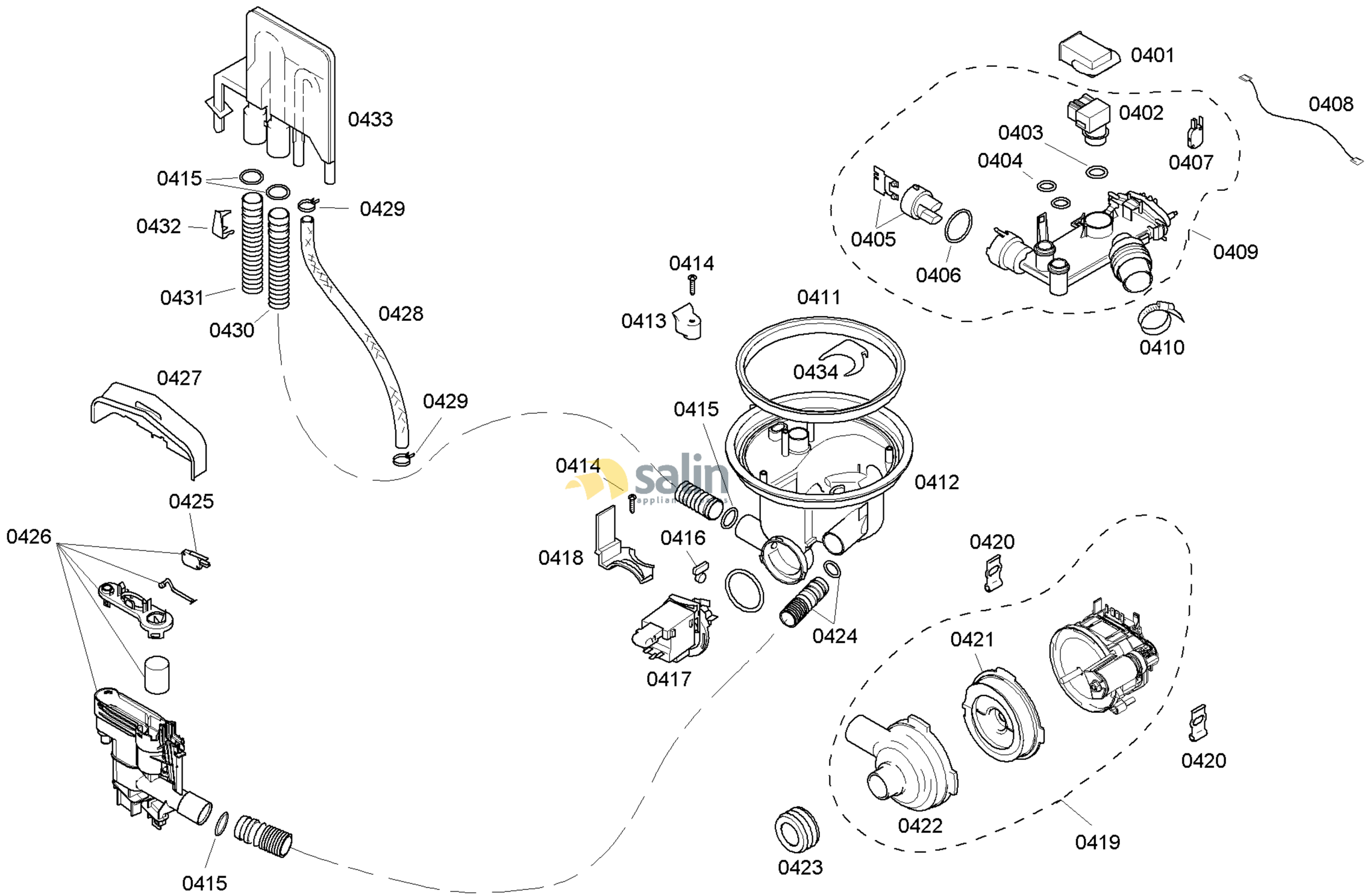

58300000121155 aet 000 c 4/6

FAMILY : SHE45C05UC
MODEL NO: SHE45C05UC/40
Check Position No/Part No or Replacement No

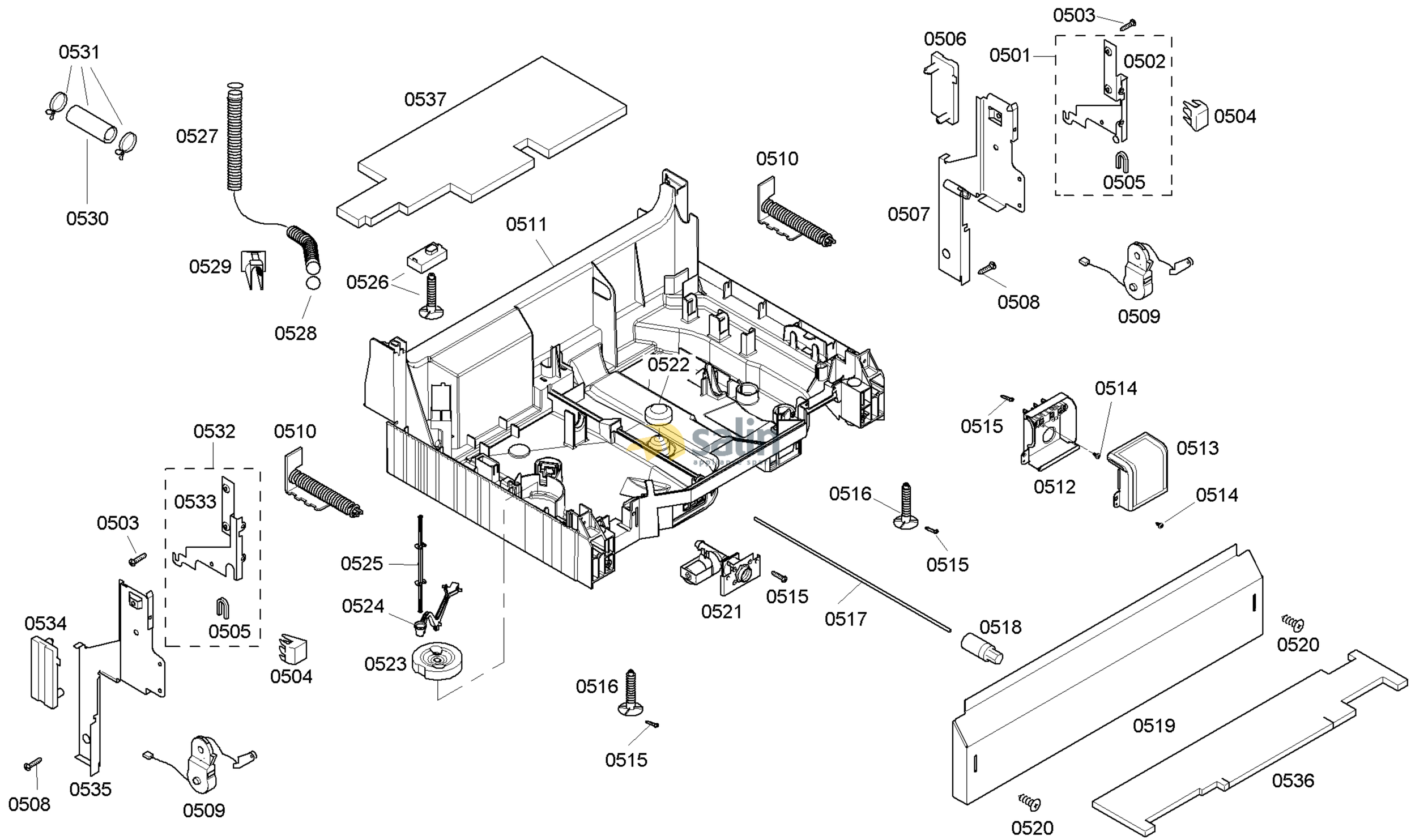

58300000121155 aet 000 c 5/6

FAMILY : SHE45C05UC
MODEL NO: SHE45C05UC/40
Check Position No/Part No or Replacement No

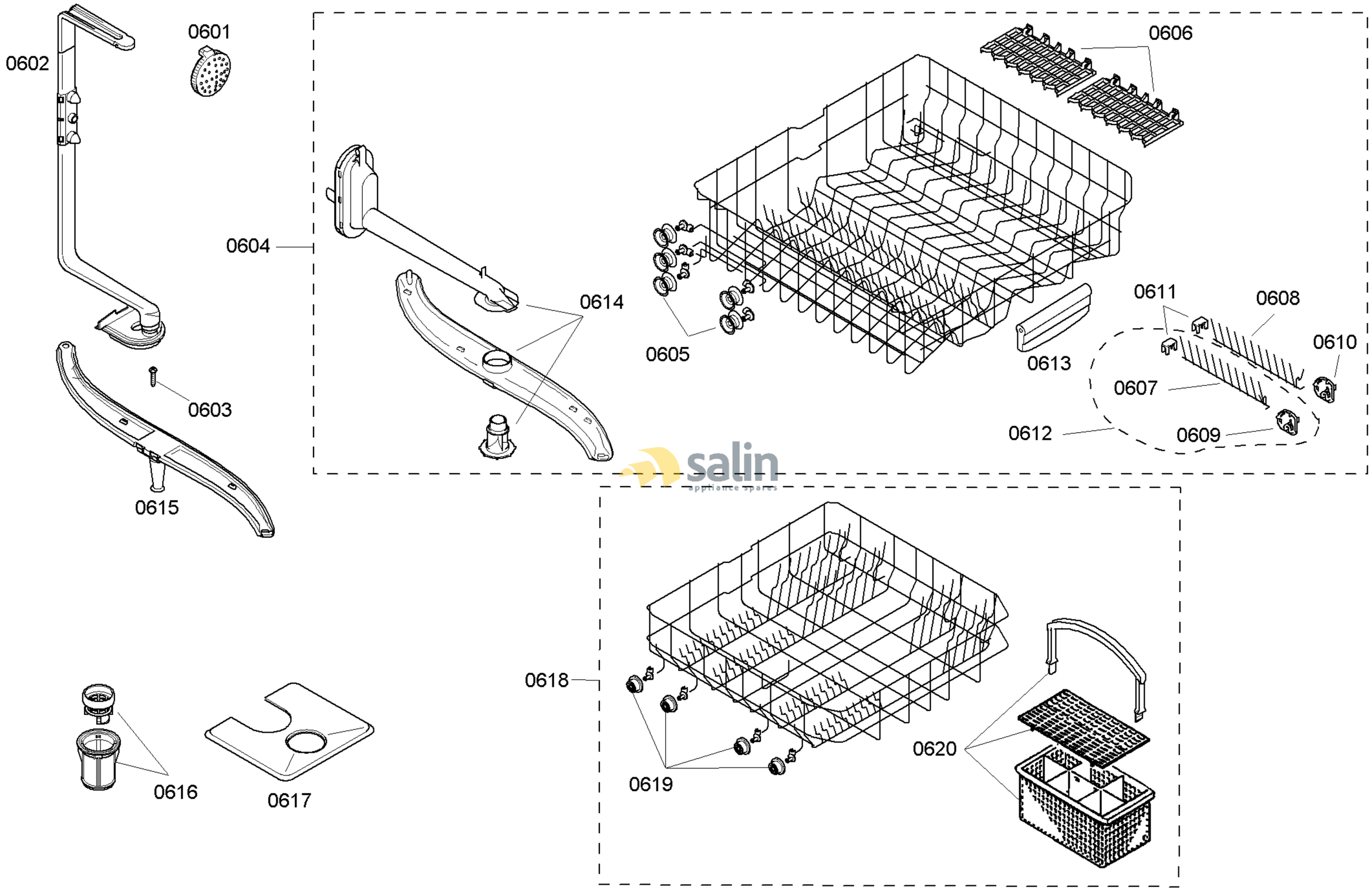

salin
appliance spares

58300000121155 aet 000 c 6/6

FAMILY : SHE45C05UC
MODEL NO: SHE45C05UC/40
Check Position No/Part No or Replacement No