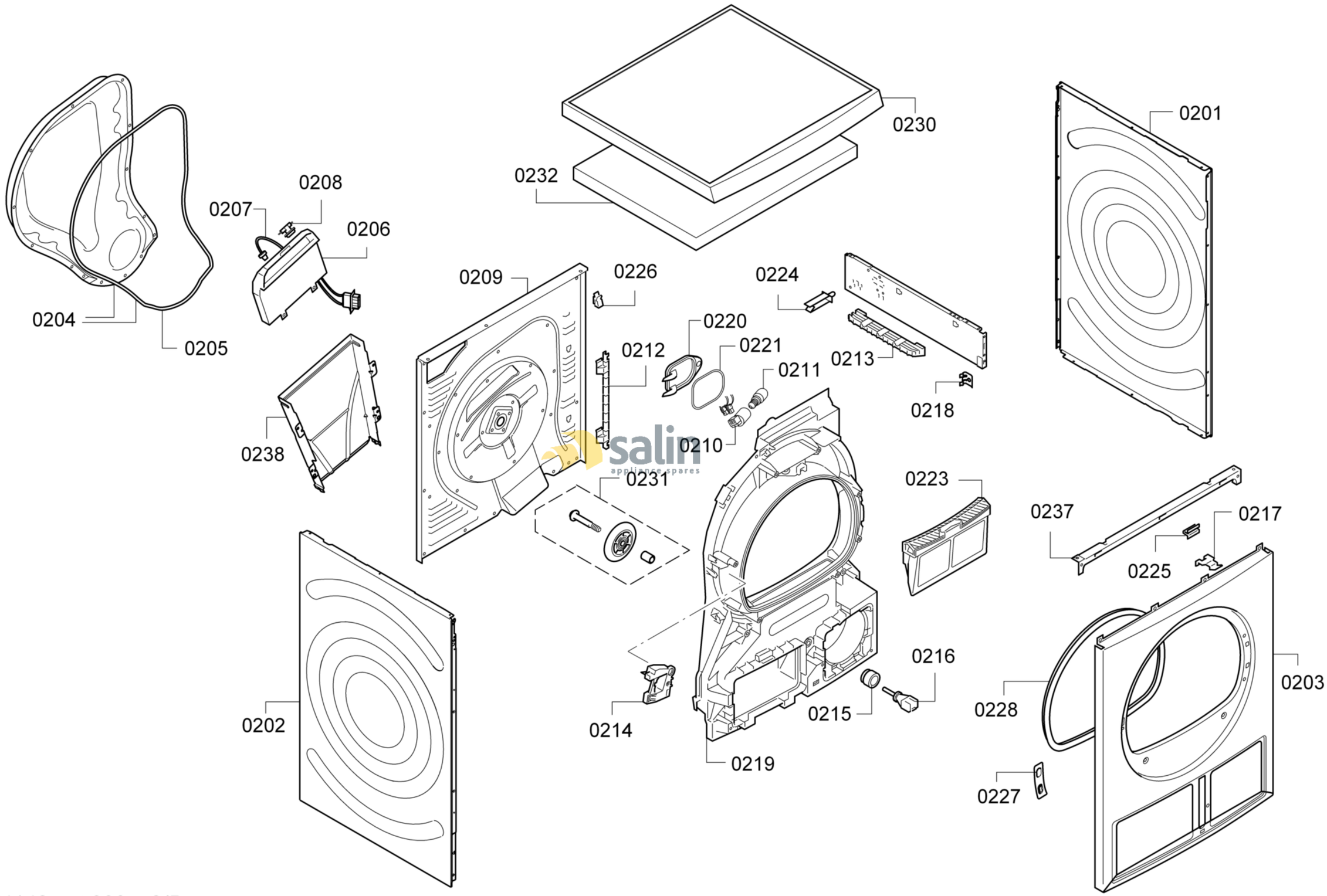

58300000174148 aet 000 a 2/5

FAMILY : WTS86501GB

MODEL NO: WTS86501GB/40

Check Position No/Part No or Replacement No

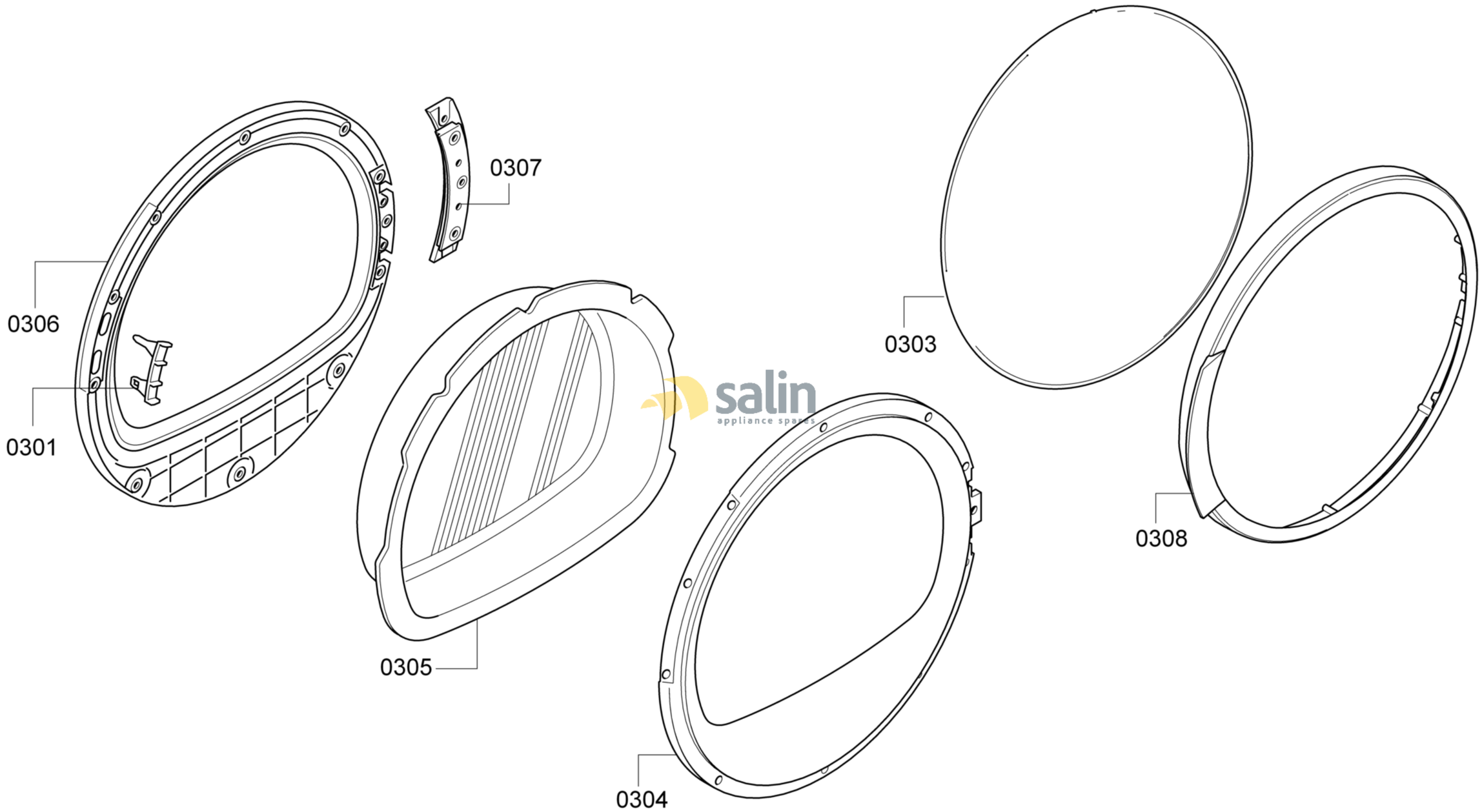

58300000174148 aet 000 a 3/5

FAMILY : WTS86501GB
MODEL NO: WTS86501GB/40
Check Position No/Part No or Replacement No

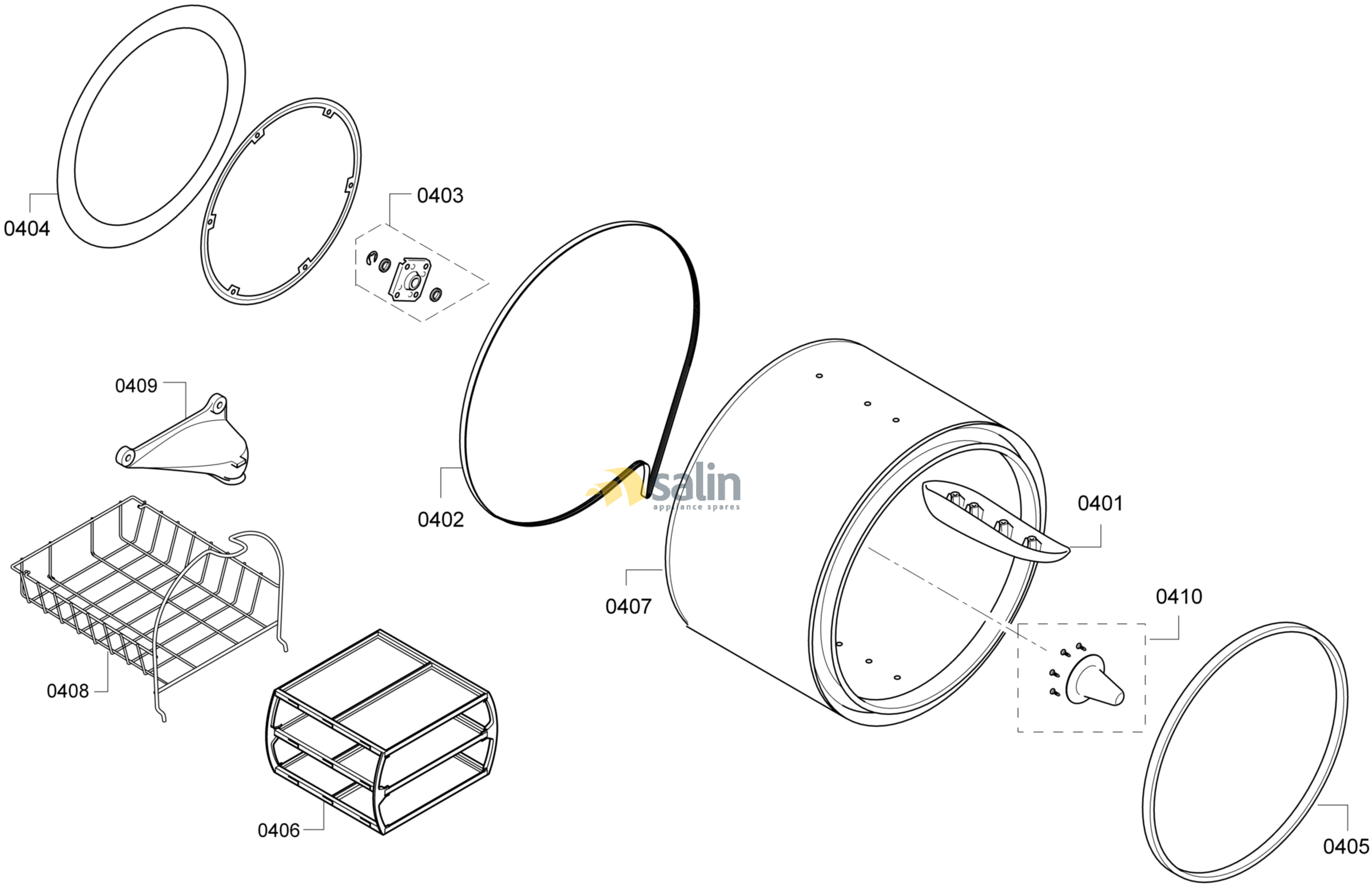

58300000174148 aet 000 a 4/5

FAMILY : WTS86501GB
MODEL NO: WTS86501GB/40
Check Position No/Part No or Replacement No

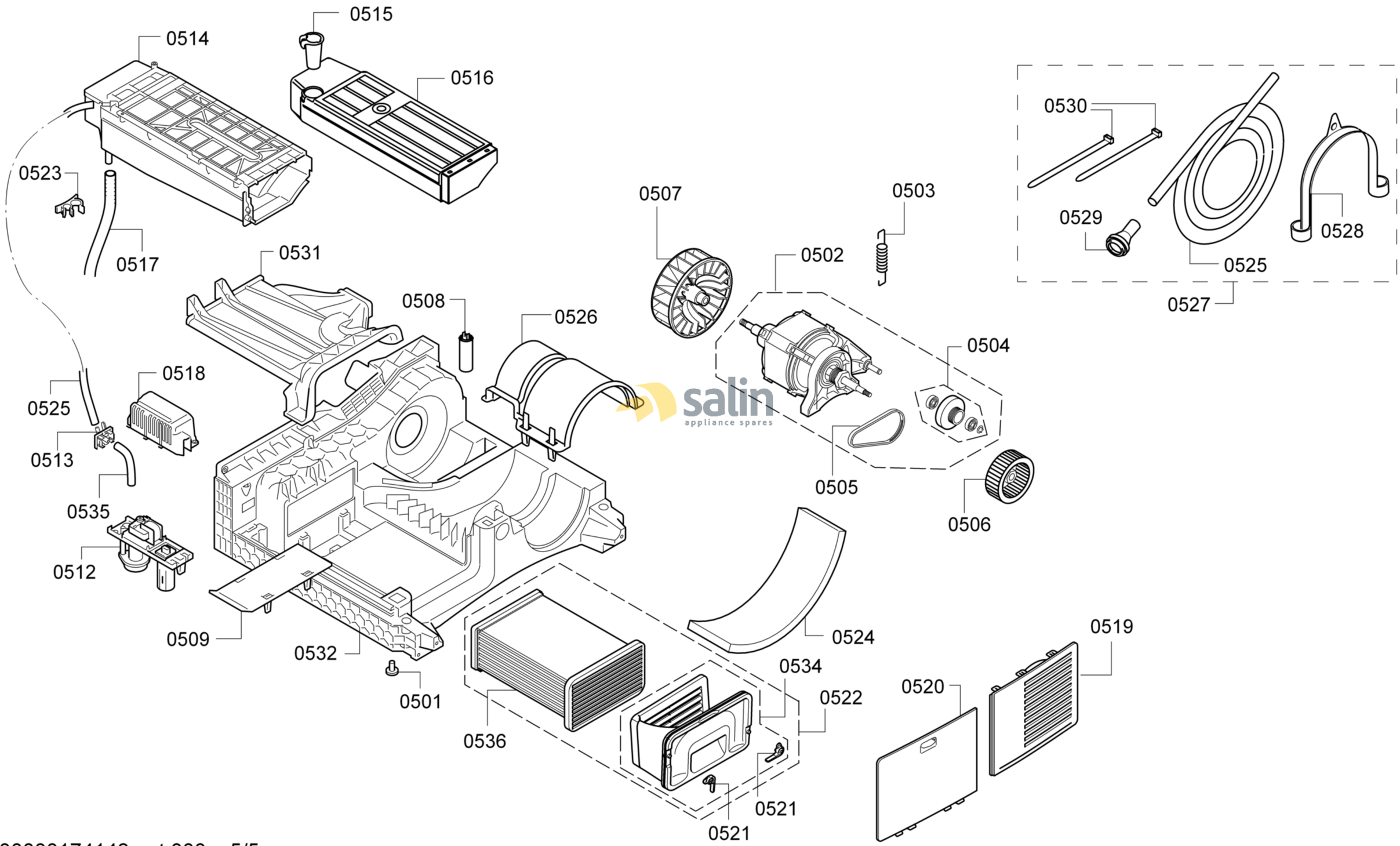

58300000174148 aet 000 a 5/5

FAMILY : WTS86501GB
MODEL NO: WTS86501GB/40
Check Position No/Part No or Replacement No