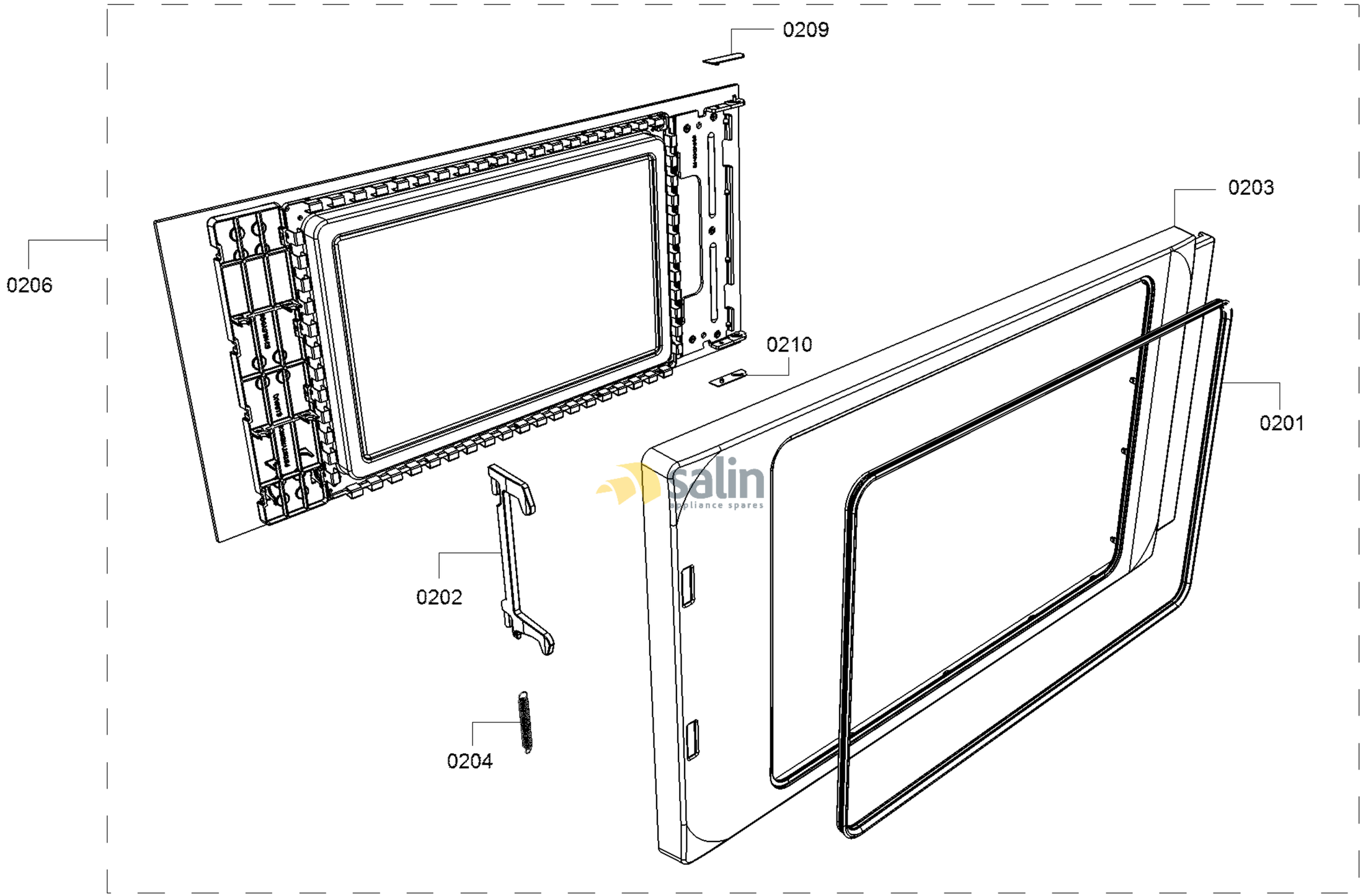

58300000193426 aet 000 c 2/4

FAMILY : BEL634GS1A
MODEL NO: BEL634GS1A/07
Check Position No/Part No or Replacement No

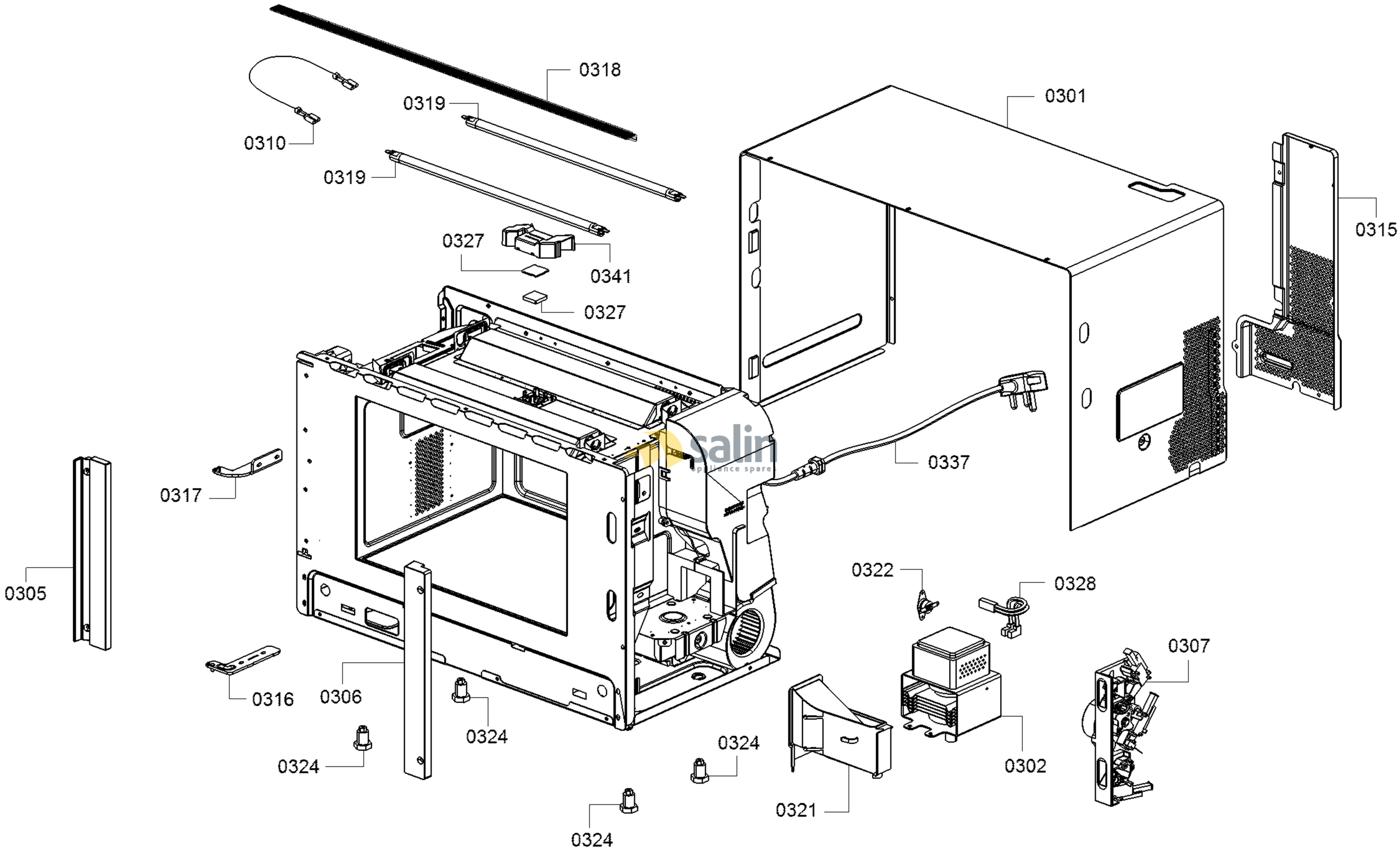

58300000193426 aet 000 c 3/4

FAMILY : BEL634GS1A
MODEL NO: BEL634GS1A/07
Check Position No/Part No or Replacement No

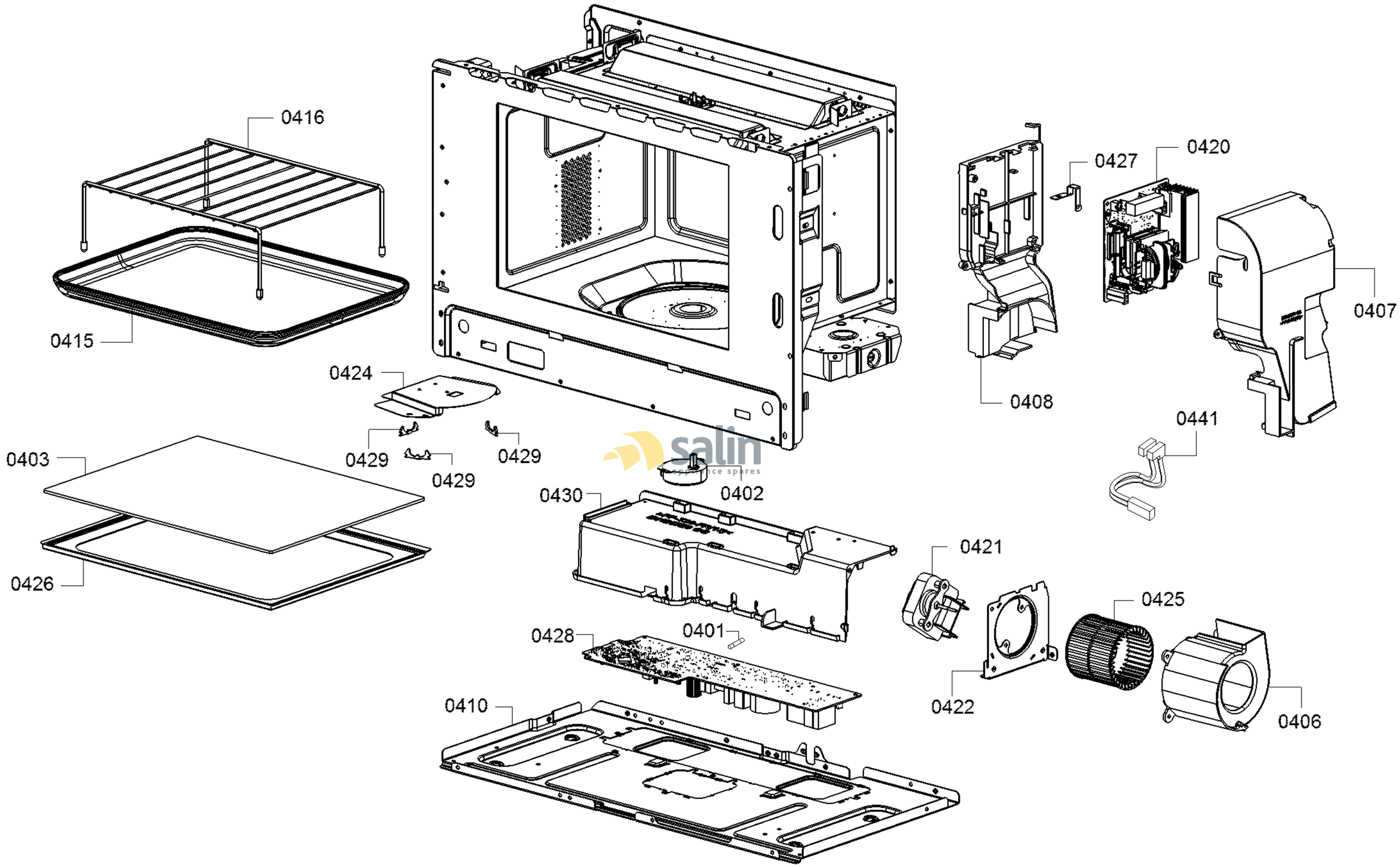

58300000193426 aet 000 c 4/4

FAMILY : BEL634GS1A
MODEL NO: BEL634GS1A/07
Check Position No/Part No or Replacement No