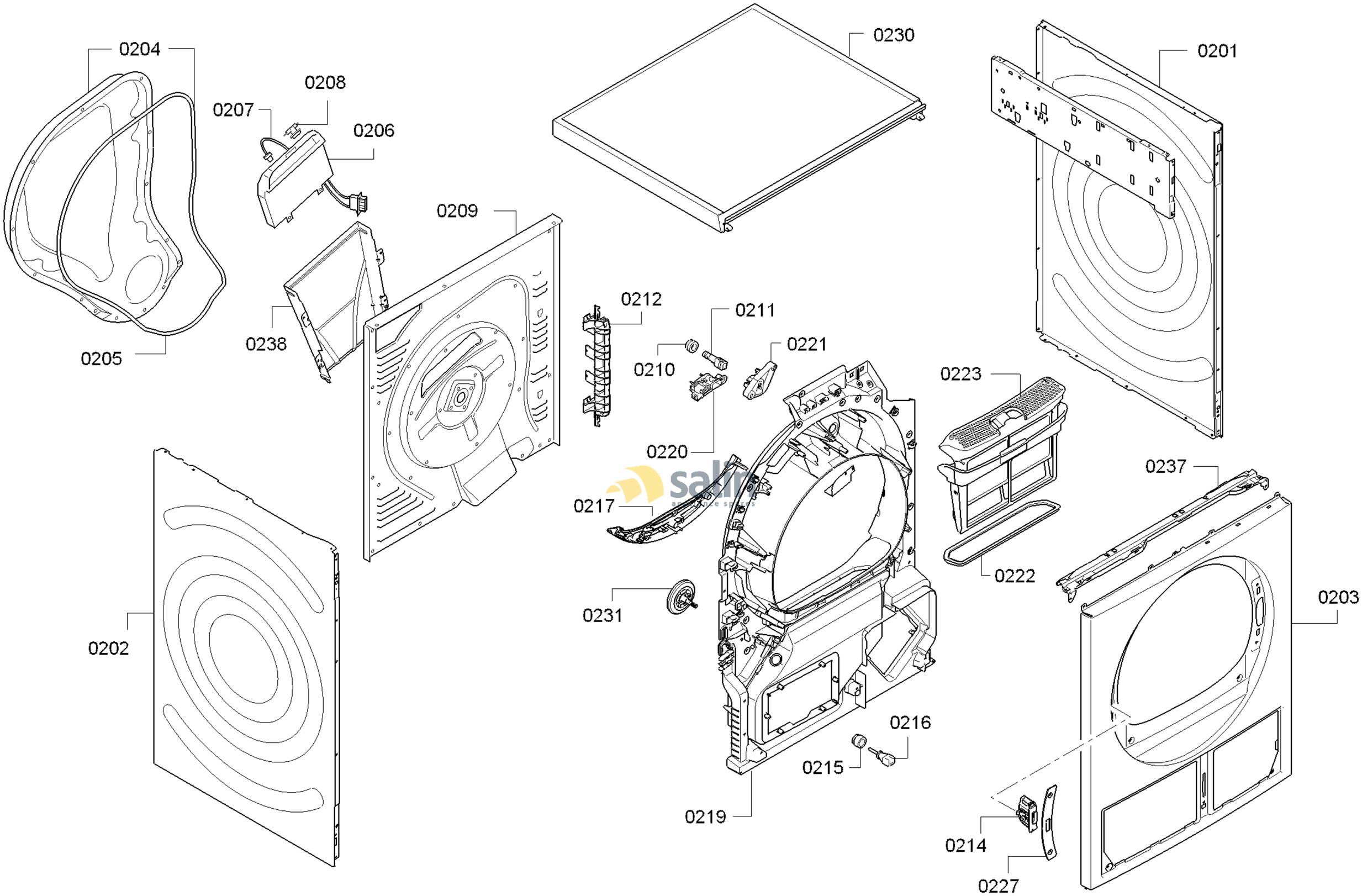

58300000173426 aet 000 b 2/6

FAMILY : WTB84300FF
MODEL NO: WTB84300FF/03
Check Position No/Part No or Replacement No

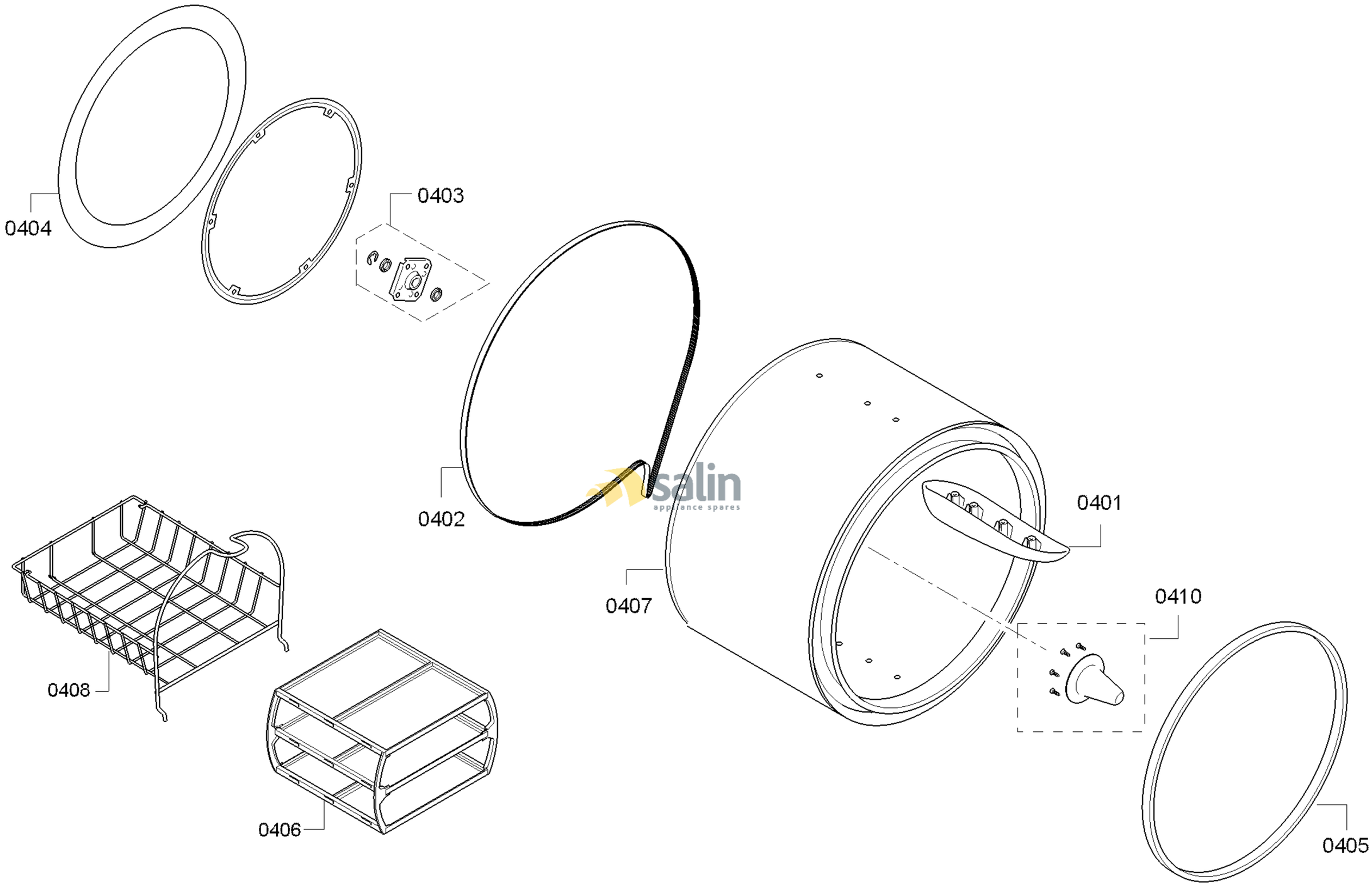

58300000173426 aet 000 b 4/6

FAMILY : WTB84300FF
MODEL NO: WTB84300FF/03
Check Position No/Part No or Replacement No

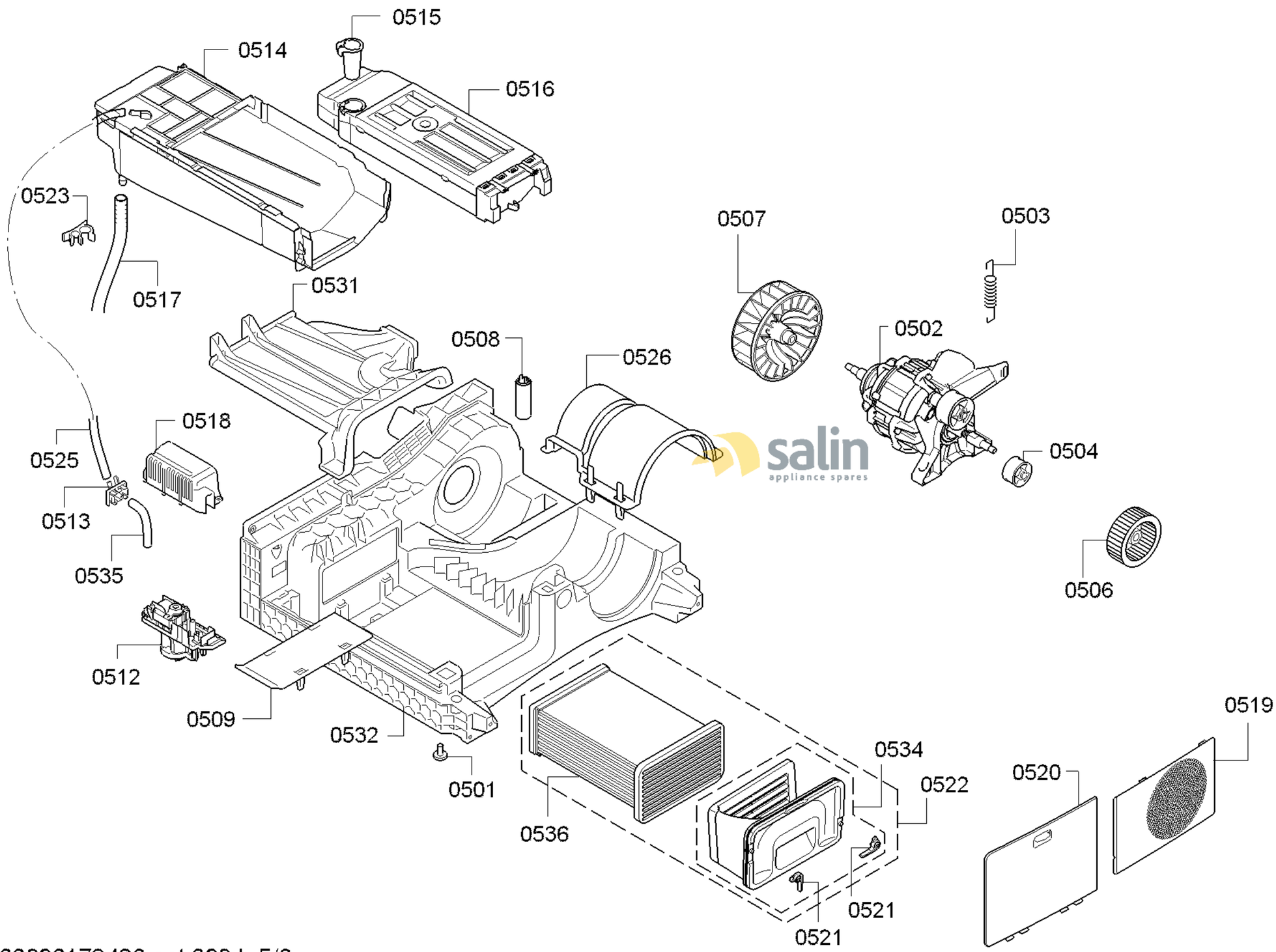

58300000173426 aet 000 b 5/6

FAMILY : WTB84300FF
MODEL NO: WTB84300FF/03
Check Position No/Part No or Replacement No

salin
appliance spares

58300000173426 aet 000 b 6/6

FAMILY : WTB84300FF

MODEL NO: WTB84300FF/03

Check Position No/Part No or Replacement No