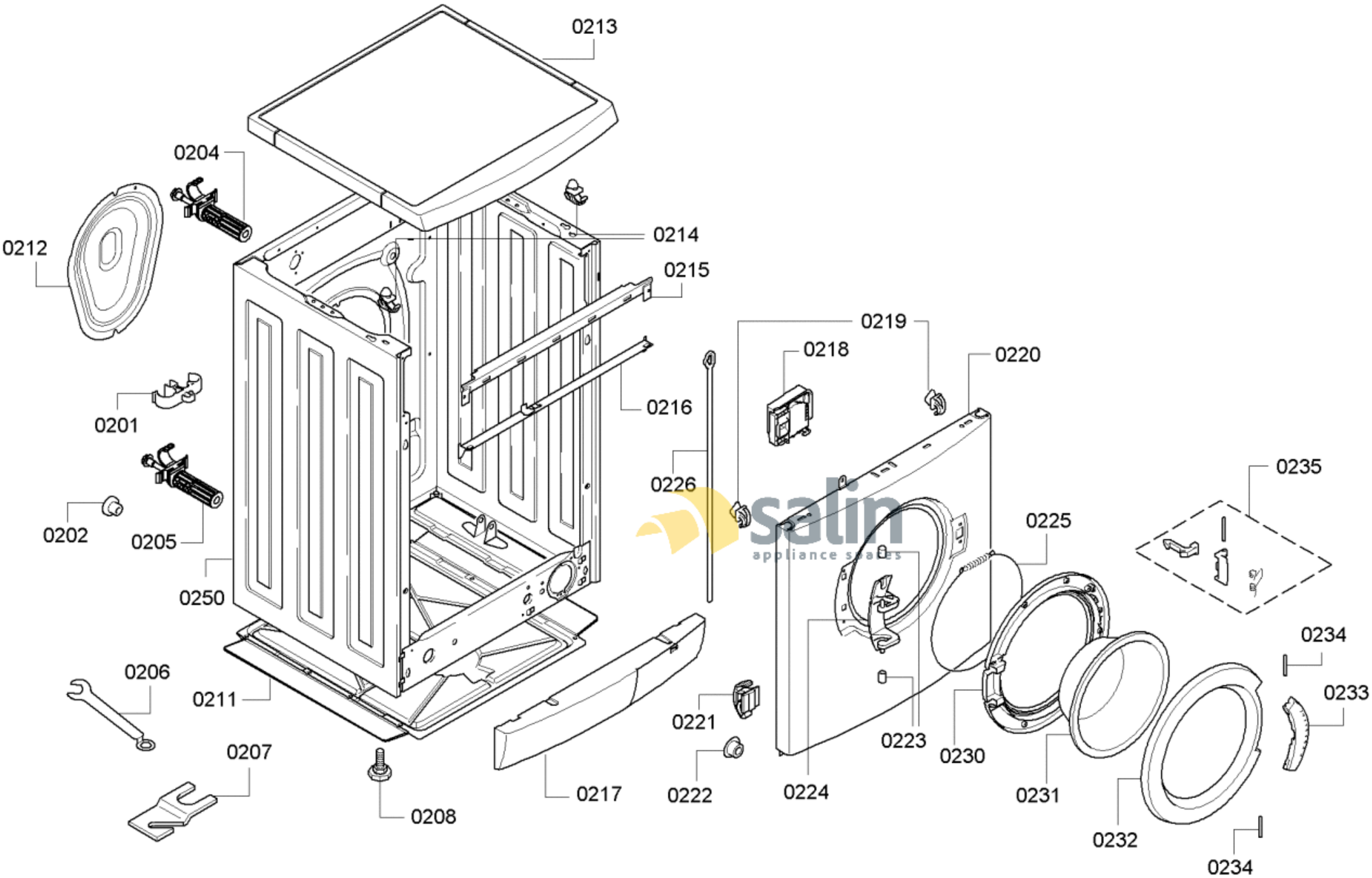

58300000157175 aet 000 a 2/6

FAMILY : WAE284R4

MODEL NO: WAE284R4/32

Check Position No/Part No or Replacement No

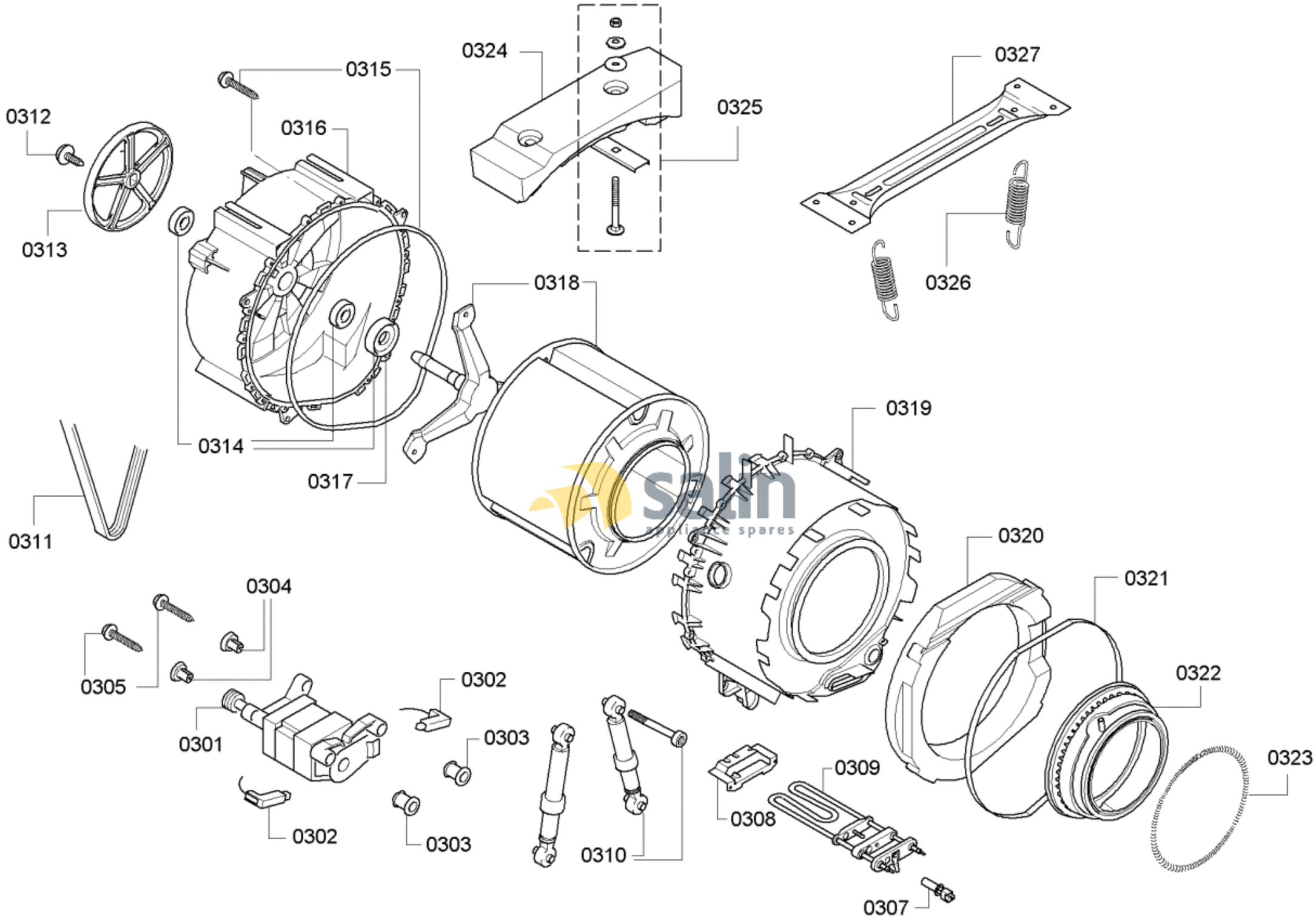

58300000157175 aet 000 a 3/6

FAMILY : WAE284R4

MODEL NO: WAE284R4/32

Check Position No/Part No or Replacement No

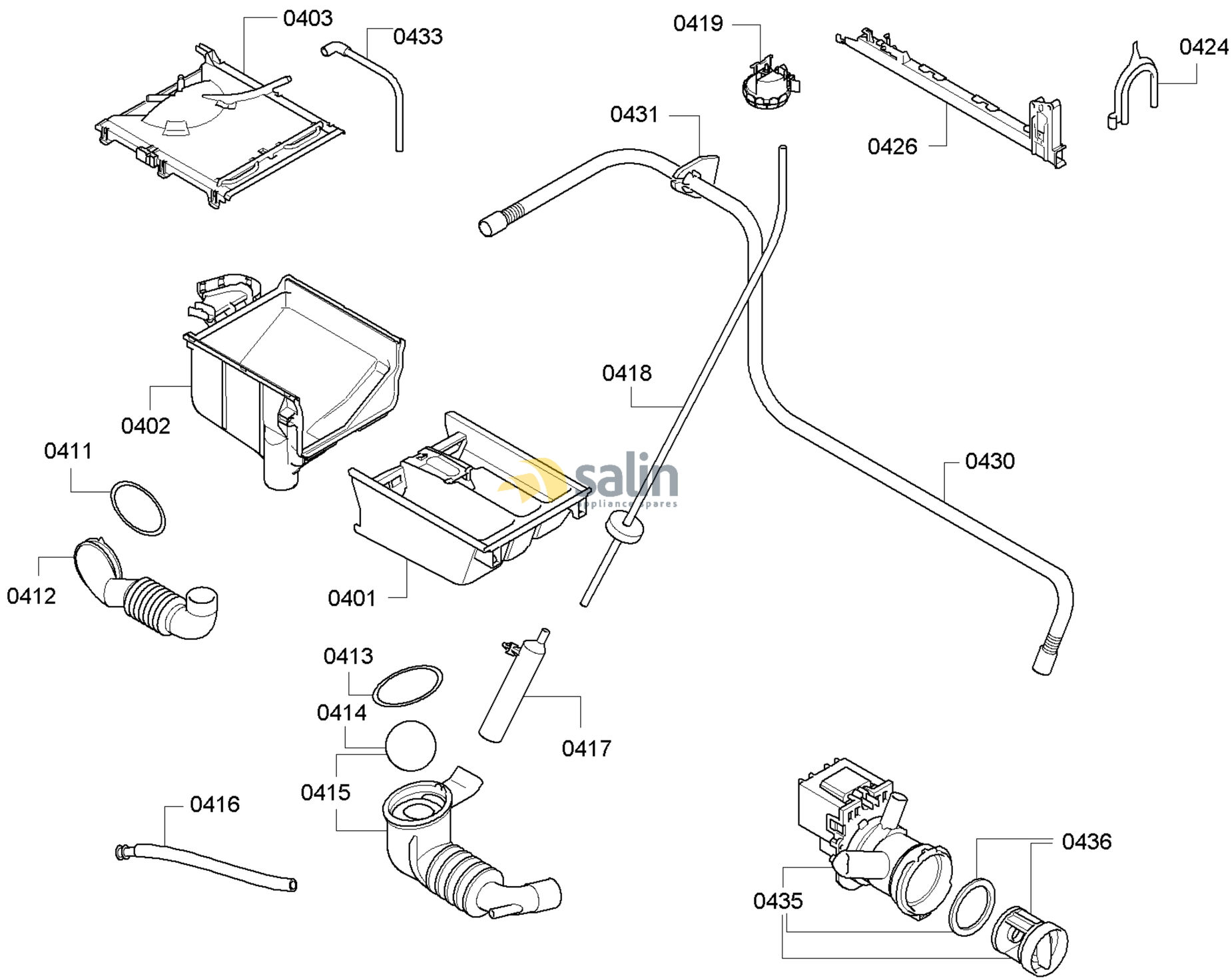

58300000157175 aet 000 a 4/6

FAMILY : WAE284R4
MODEL NO: WAE284R4/32
Check Position No/Part No or Replacement No

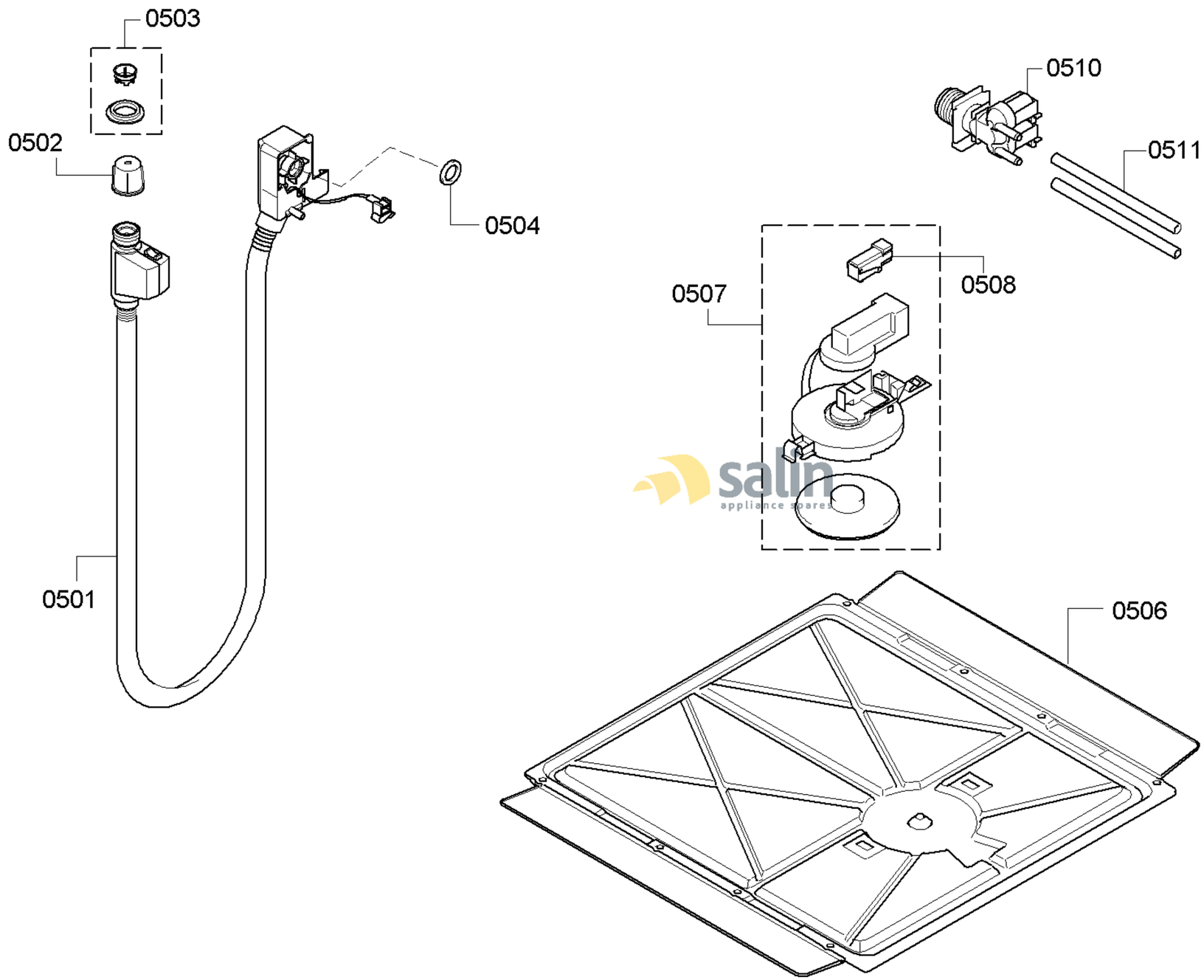

58300000157175 aet 000 a 5/6

FAMILY : WAE284R4
MODEL NO: WAE284R4/32
Check Position No/Part No or Replacement No