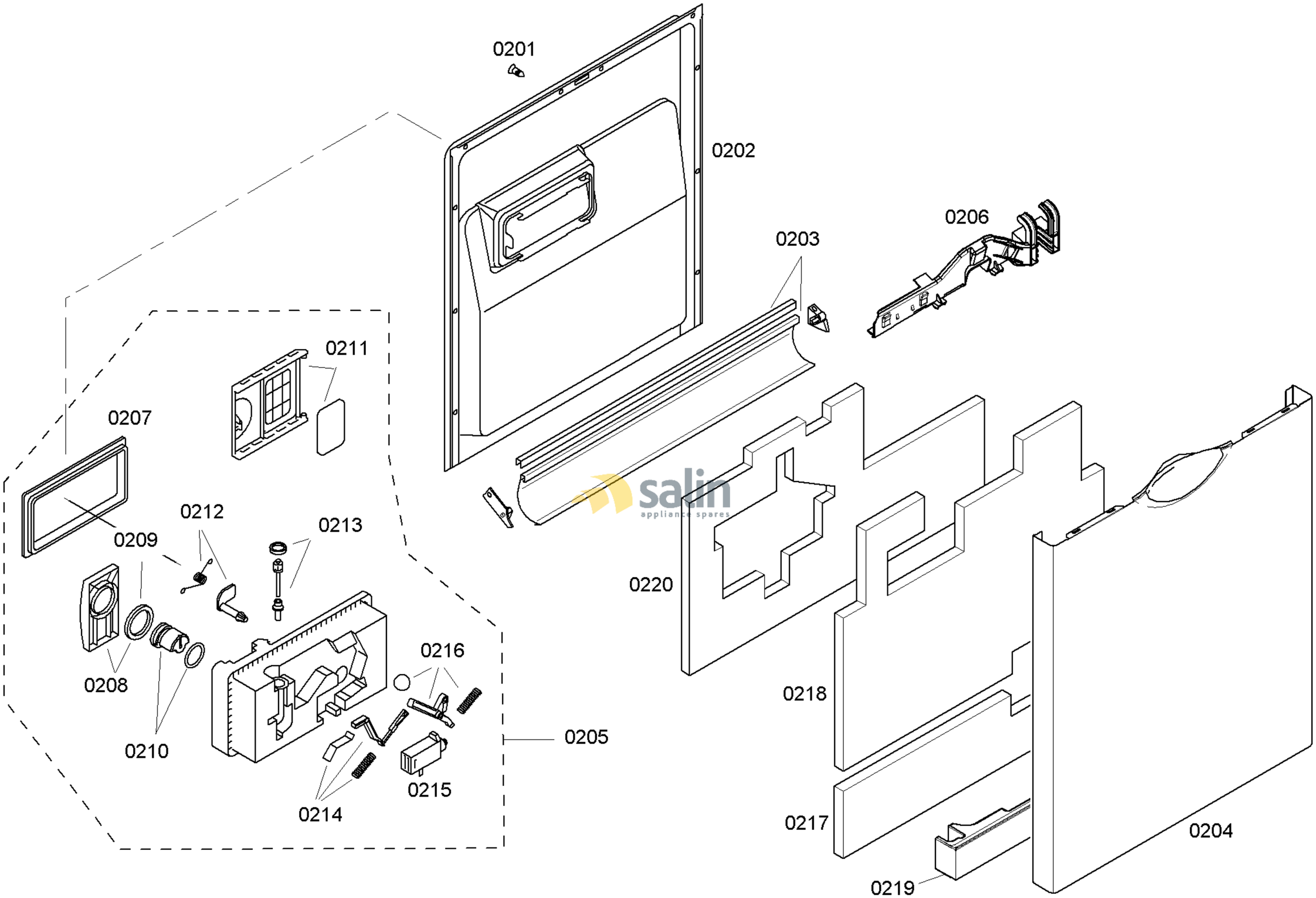

58300000125402 aet 000 a 2/6

FAMILY : SHE43M06UC
MODEL NO: SHE43M06UC/48
Check Position No/Part No or Replacement No

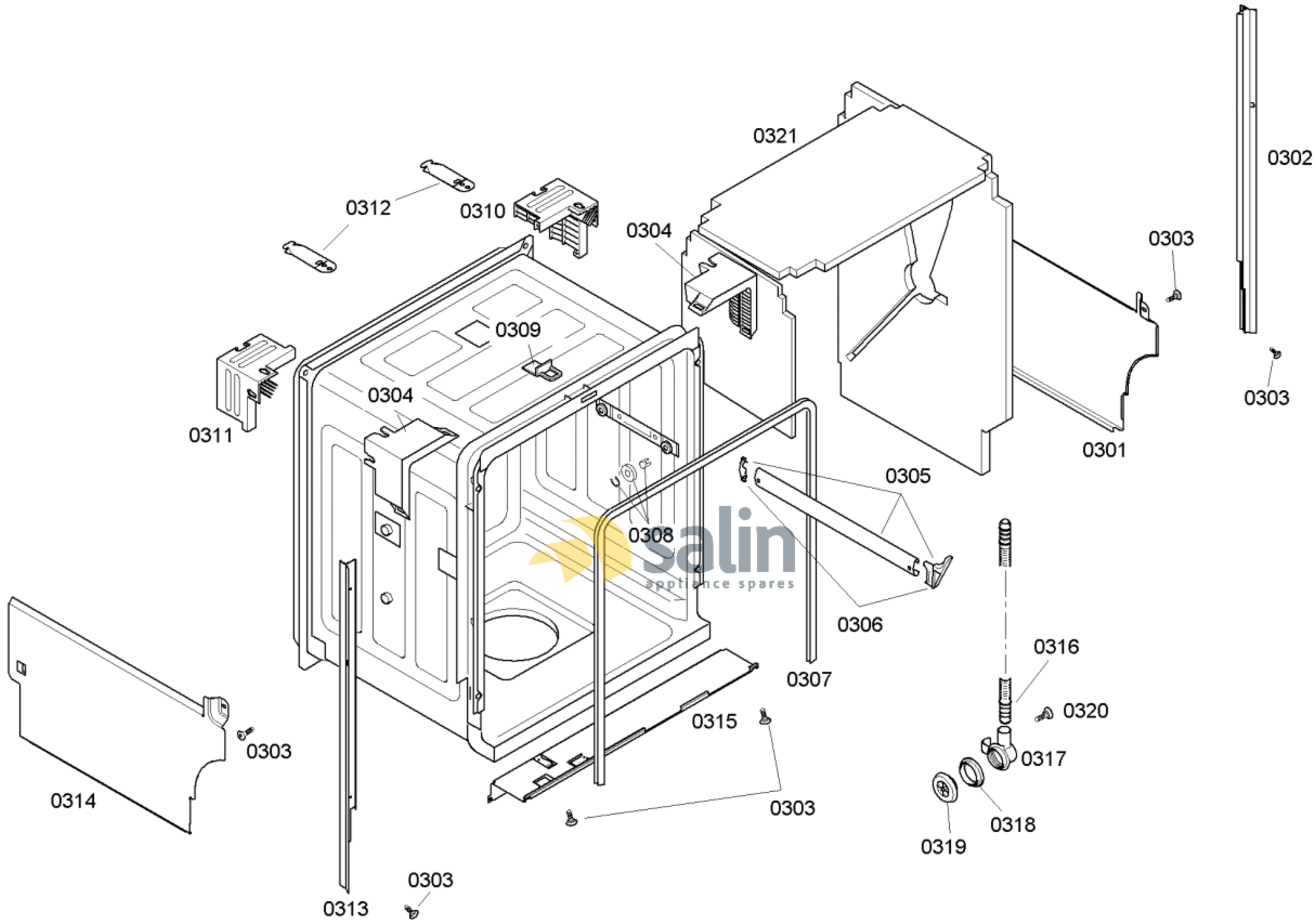

58300000125402 aet 000 a 3/6

FAMILY : SHE43M06UC

MODEL NO: SHE43M06UC/48

Check Position No/Part No or Replacement No

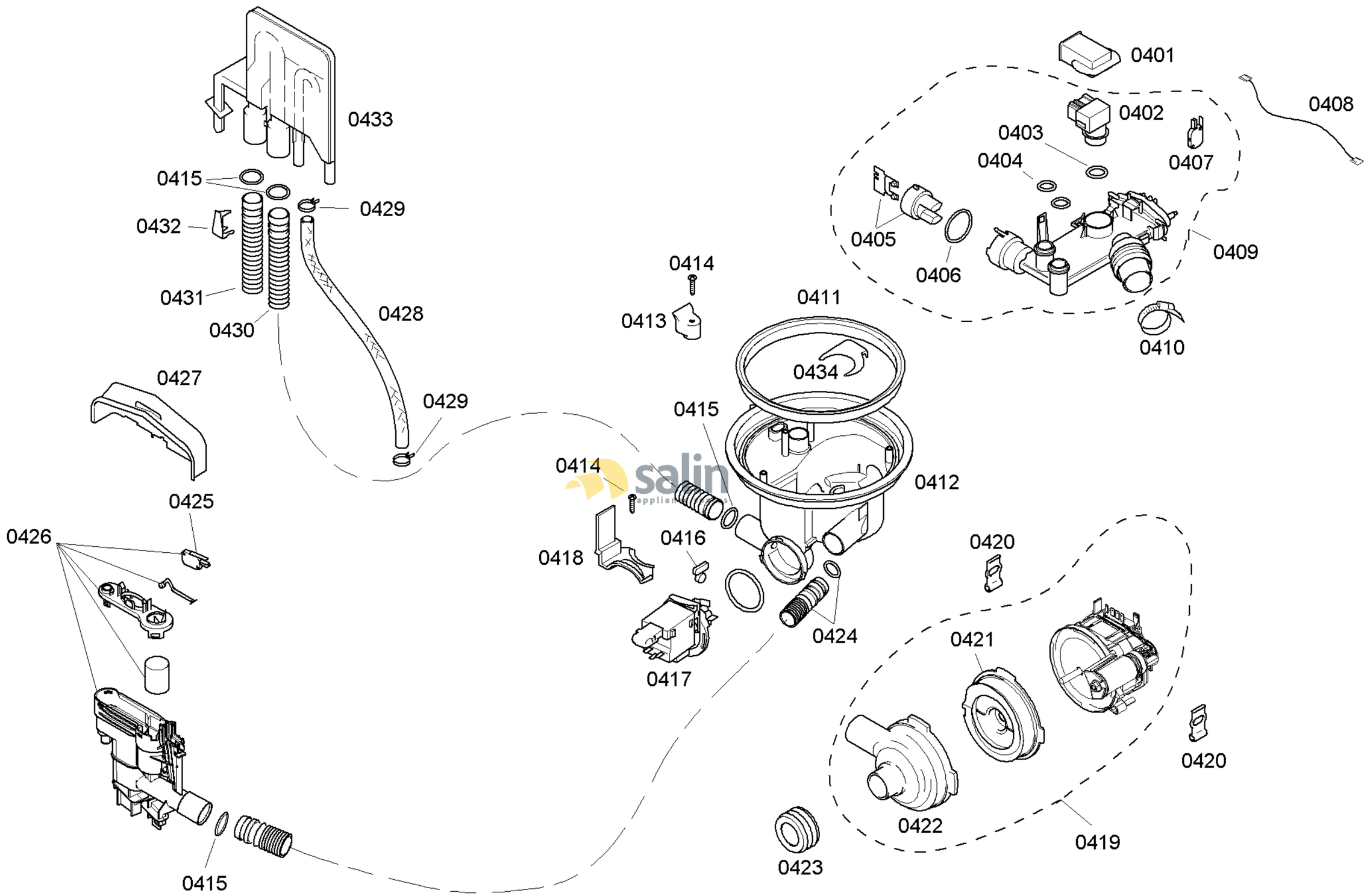

58300000125402 aet 000 a 4/6

FAMILY : SHE43M06UC
MODEL NO: SHE43M06UC/48
Check Position No/Part No or Replacement No

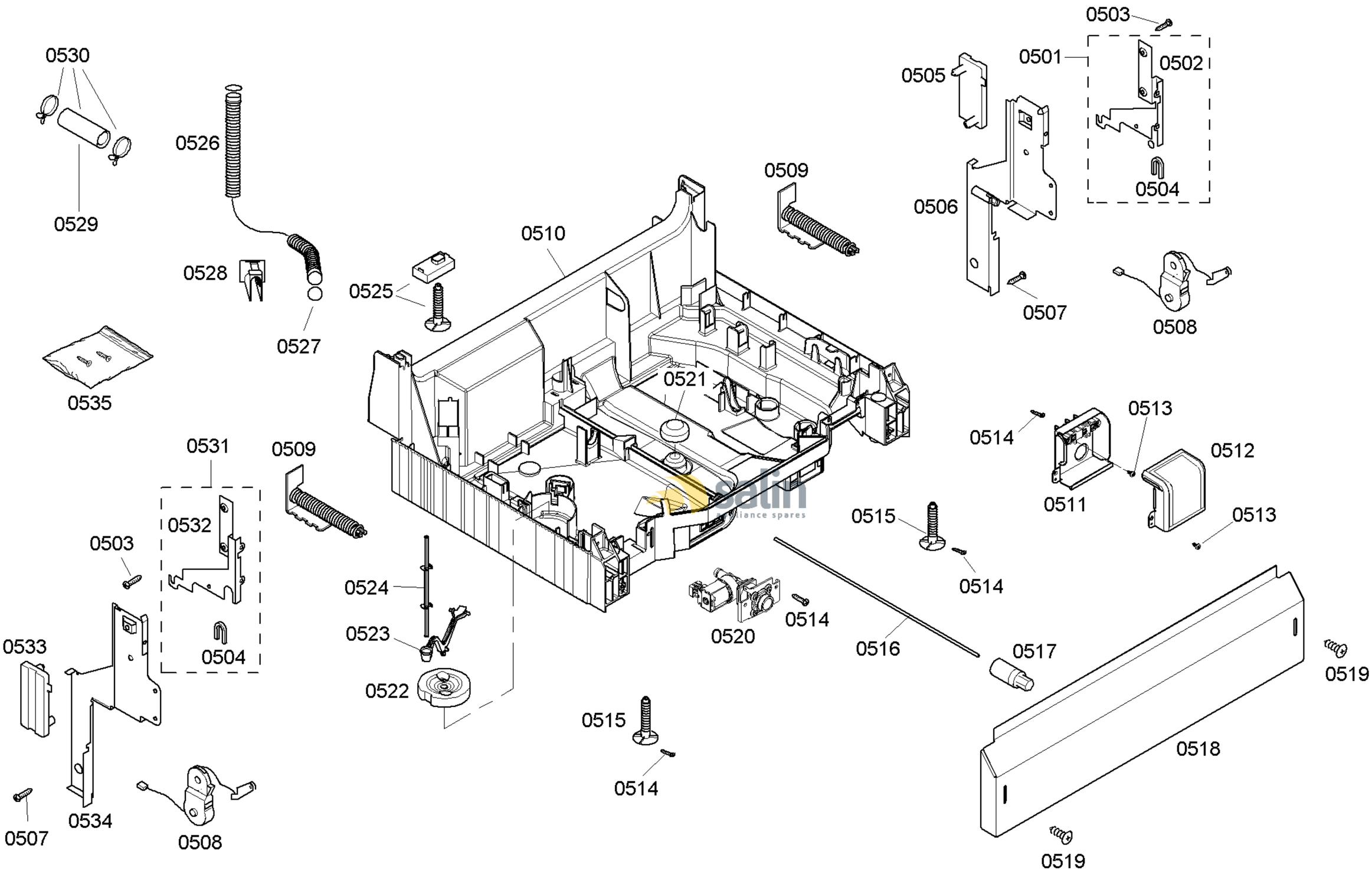

58300000125402 aet 000 a 5/6

FAMILY : SHE43M06UC
MODEL NO: SHE43M06UC/48
Check Position No/Part No or Replacement No

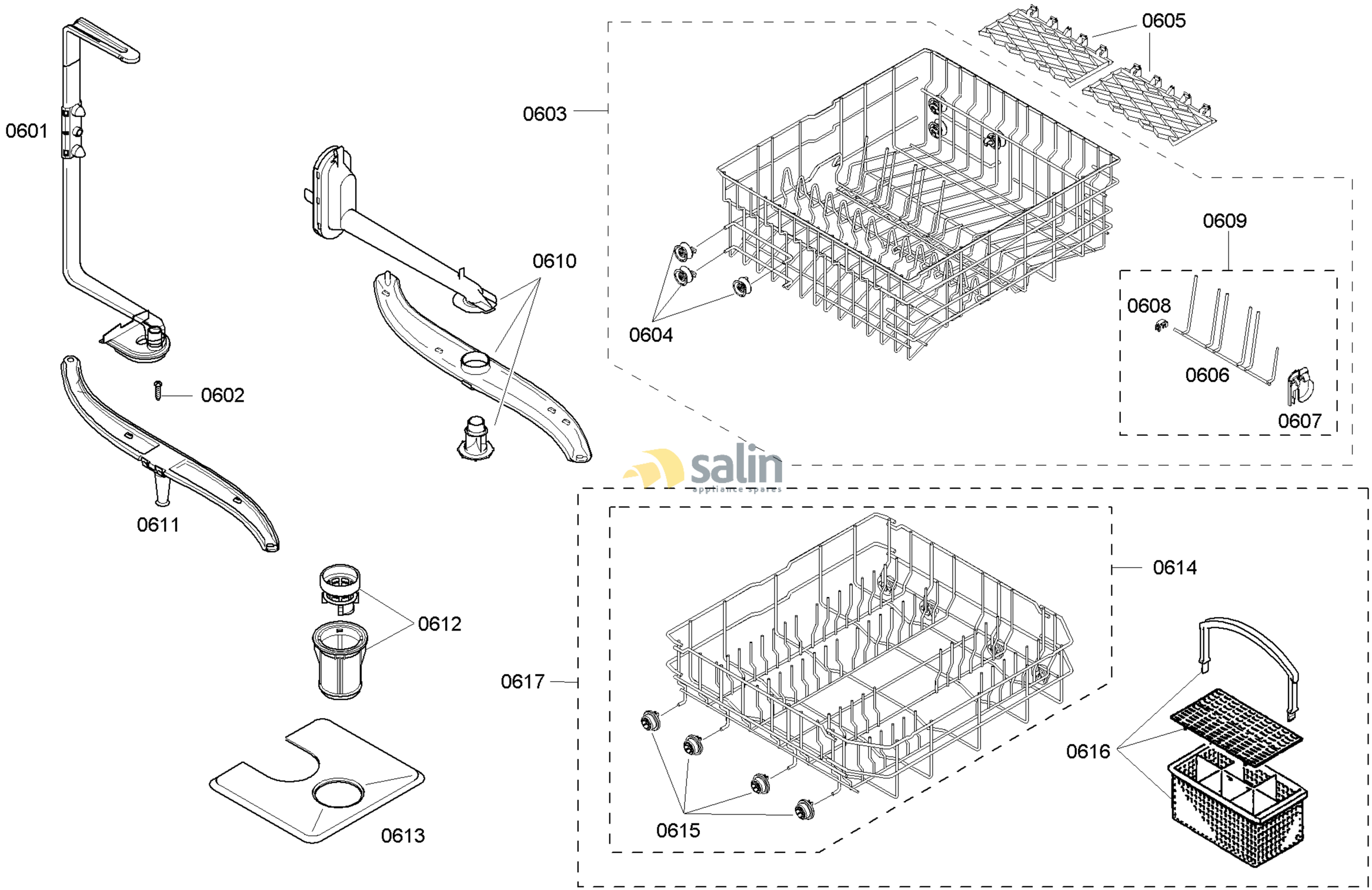

58300000125402 aet 000 a 6/6

FAMILY : SHE43M06UC
MODEL NO: SHE43M06UC/48
Check Position No/Part No or Replacement No