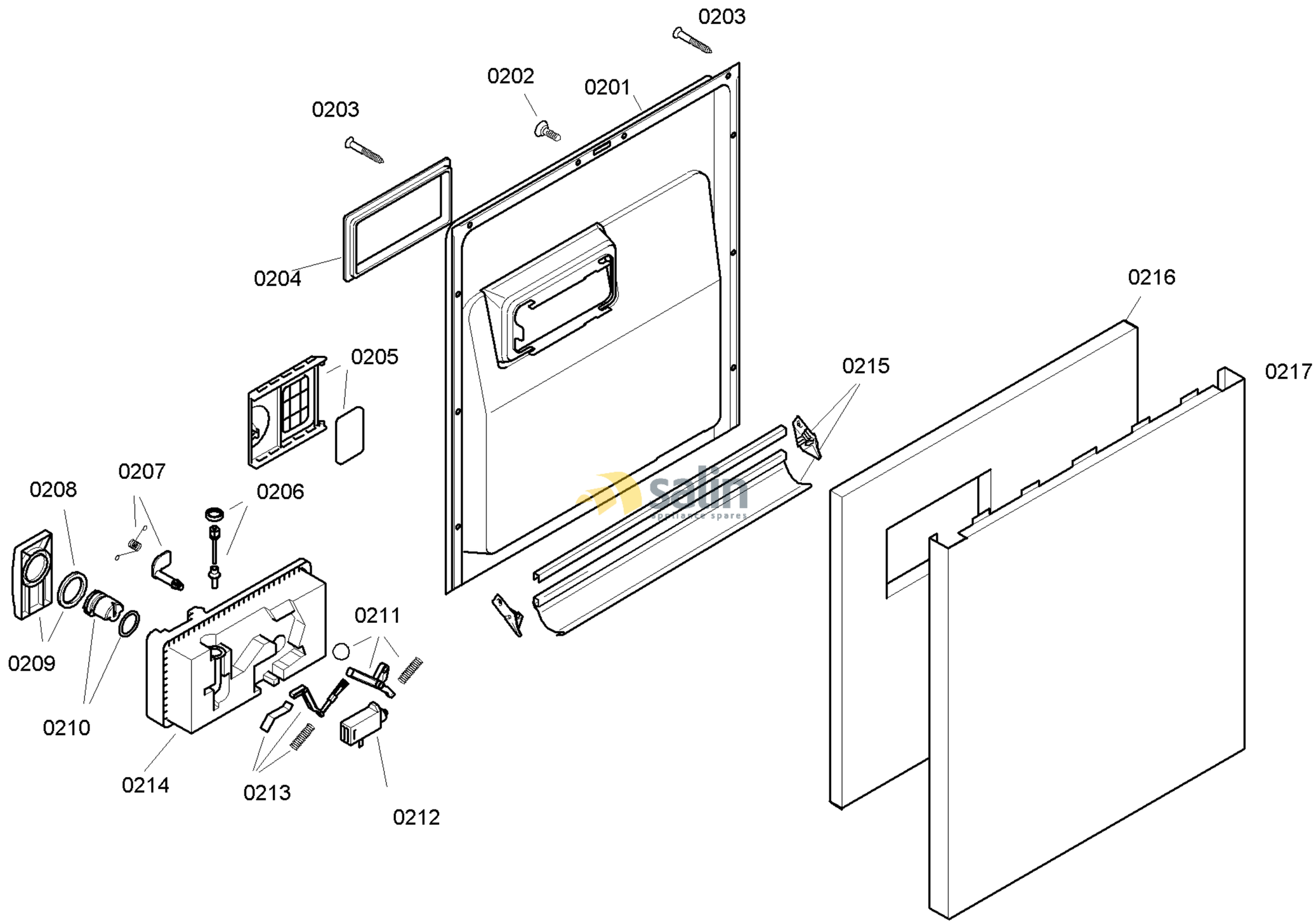

58300000108821 aet 000 d 2/6

FAMILY : SGS43E08II
MODEL NO: SGS43E08II/71
Check Position No/Part No or Replacement No

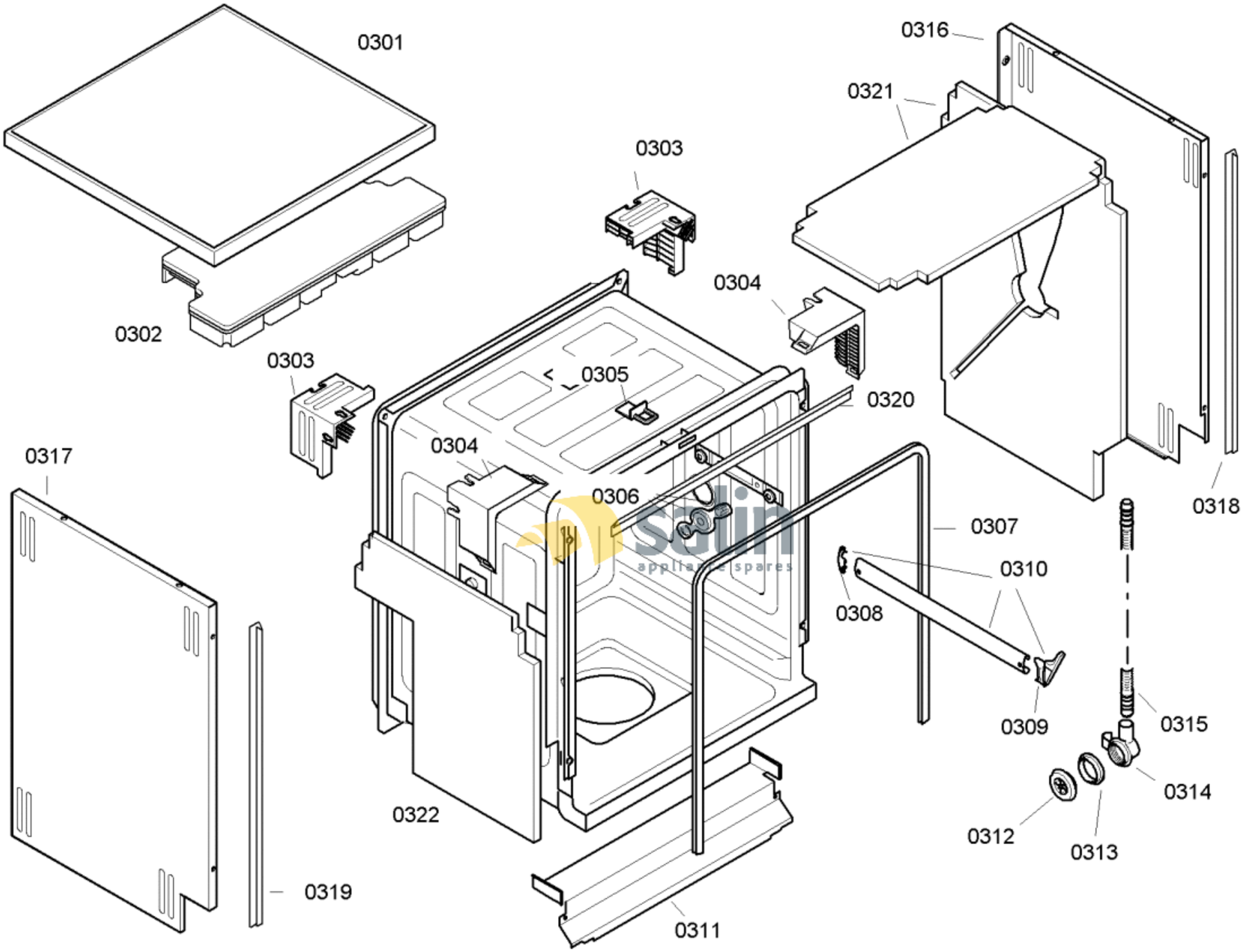

58300000108821 aet 000 d 3/6

FAMILY : SGS43E08II

MODEL NO: SGS43E08II/71

Check Position No/Part No or Replacement No

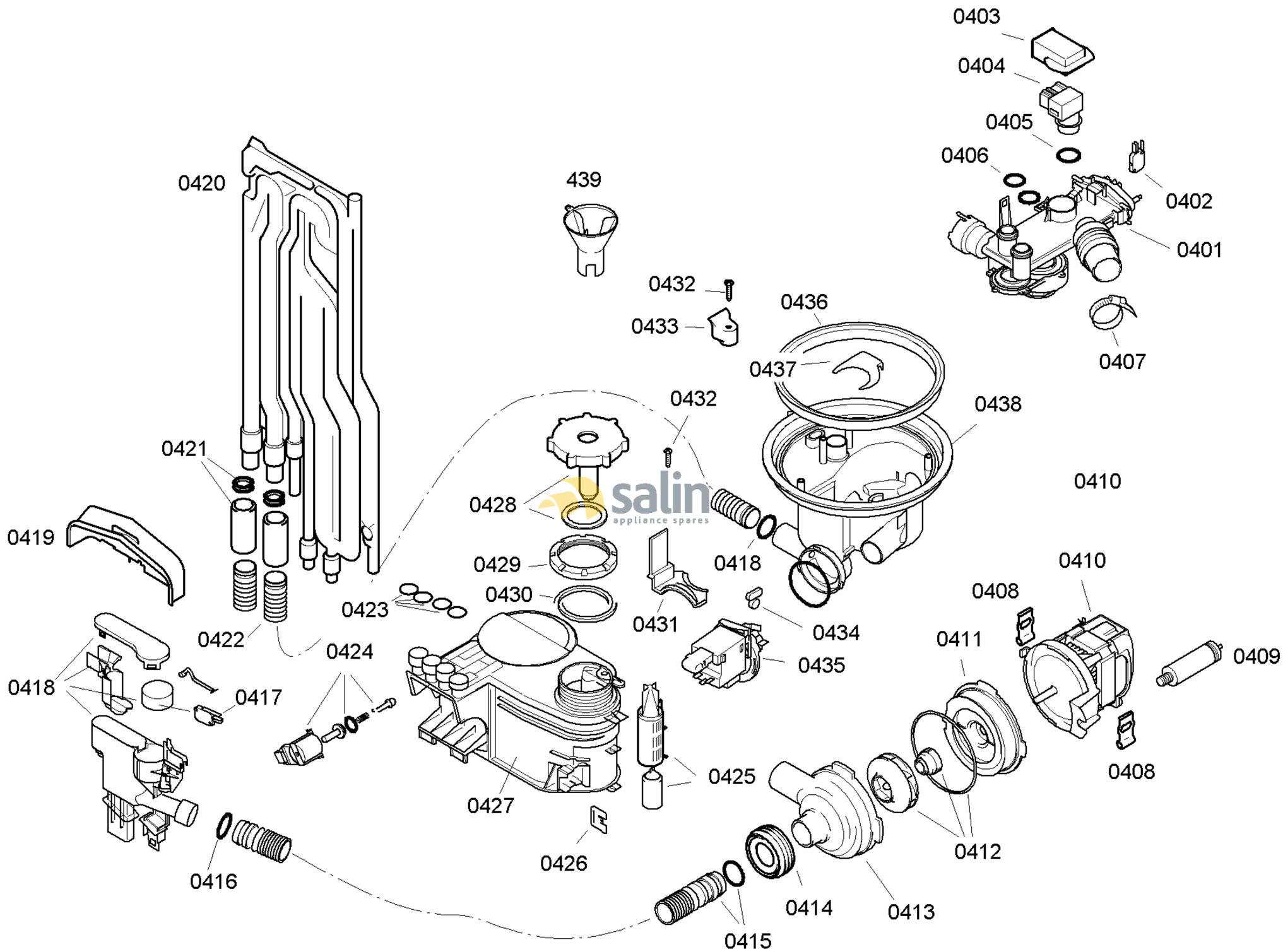

58300000108821 aet 000 d 4/6

FAMILY : SGS43E08II
MODEL NO: SGS43E08II/71
Check Position No/Part No or Replacement No

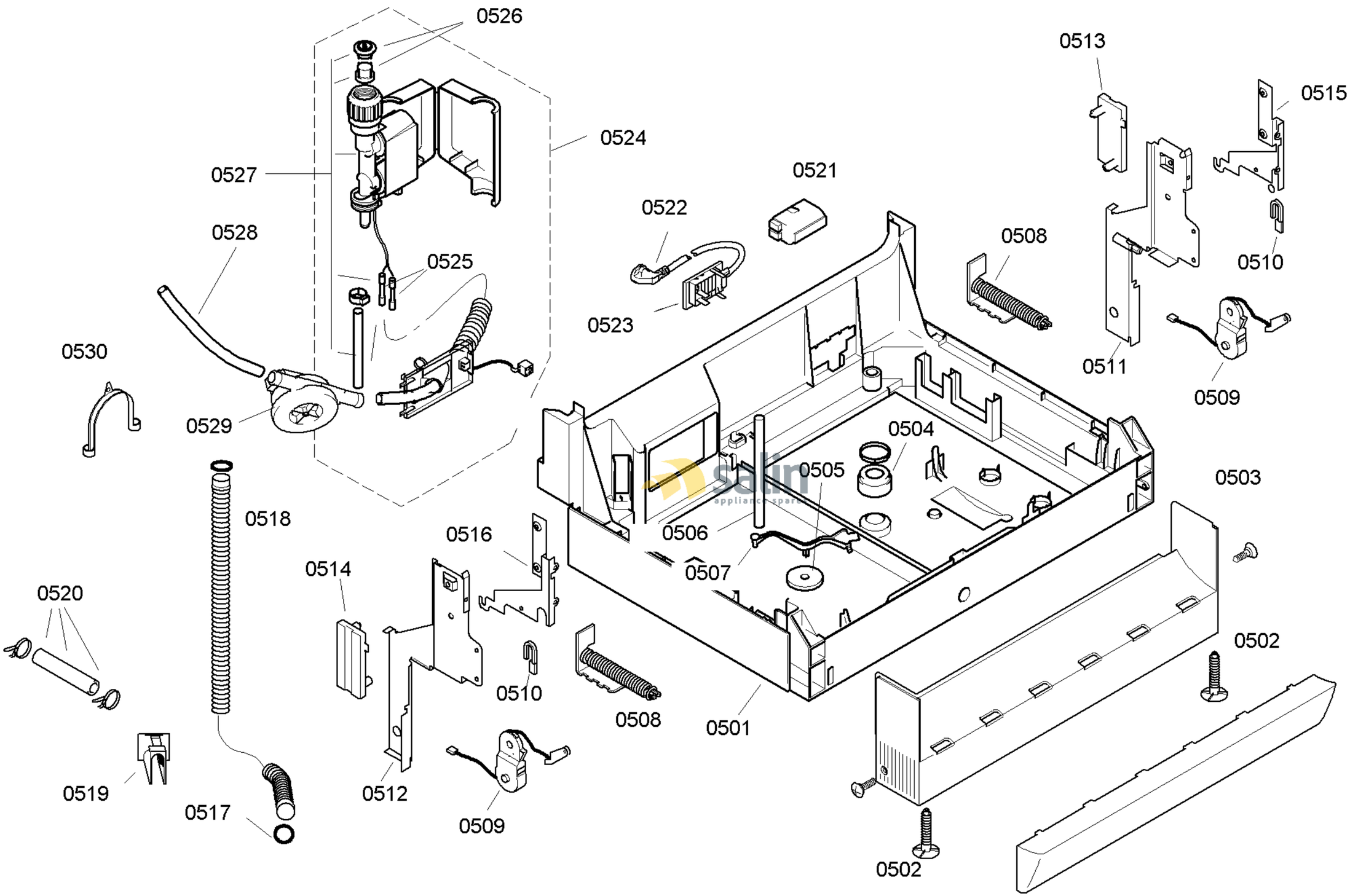

58300000108821 aet 000 d 5/6

FAMILY : SGS43E08II
MODEL NO: SGS43E08II/71
Check Position No/Part No or Replacement No

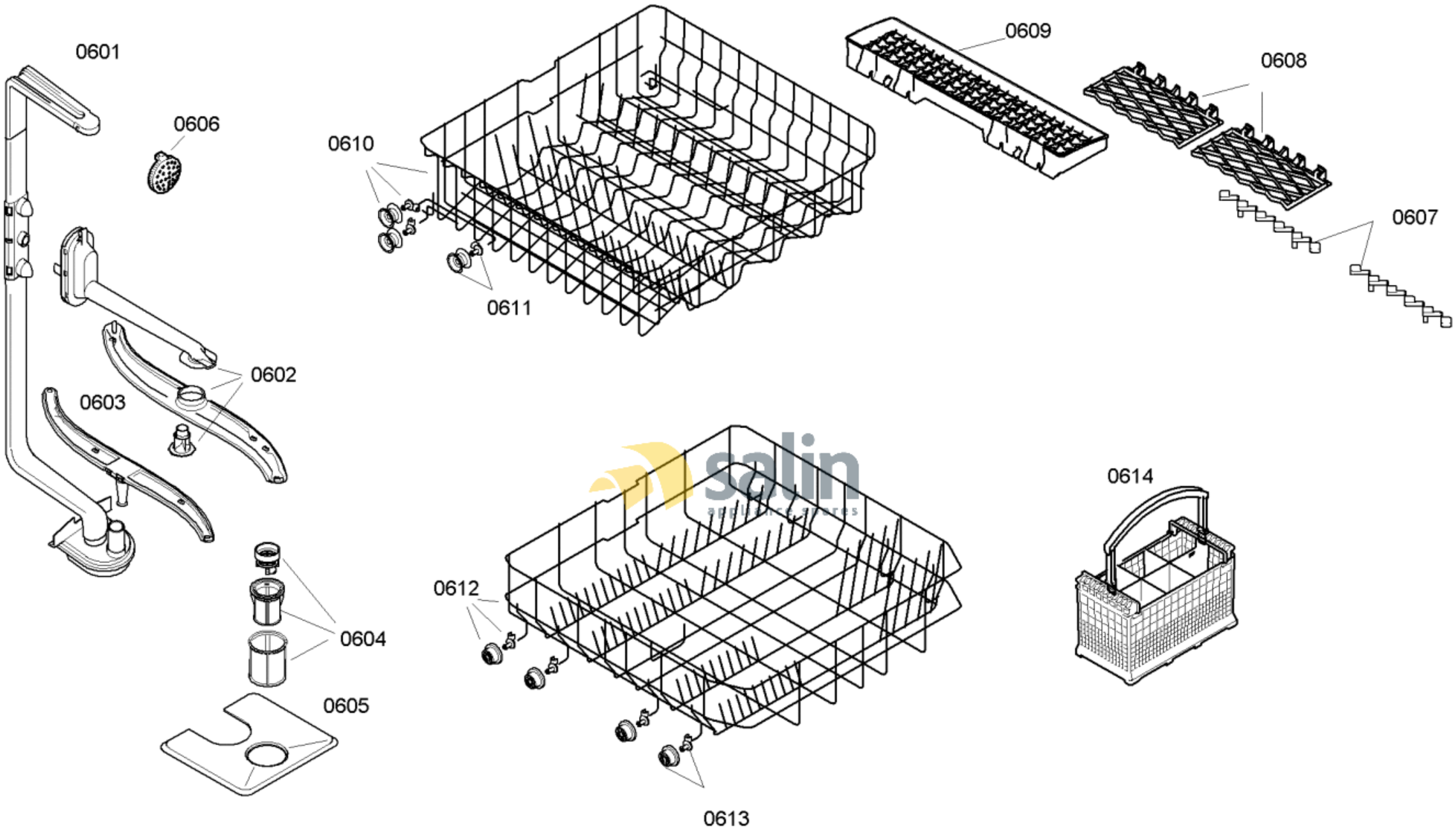

58300000108821 aet 000 d 6/6

FAMILY : SGS43E08II

MODEL NO: SGS43E08II/71

Check Position No/Part No or Replacement No