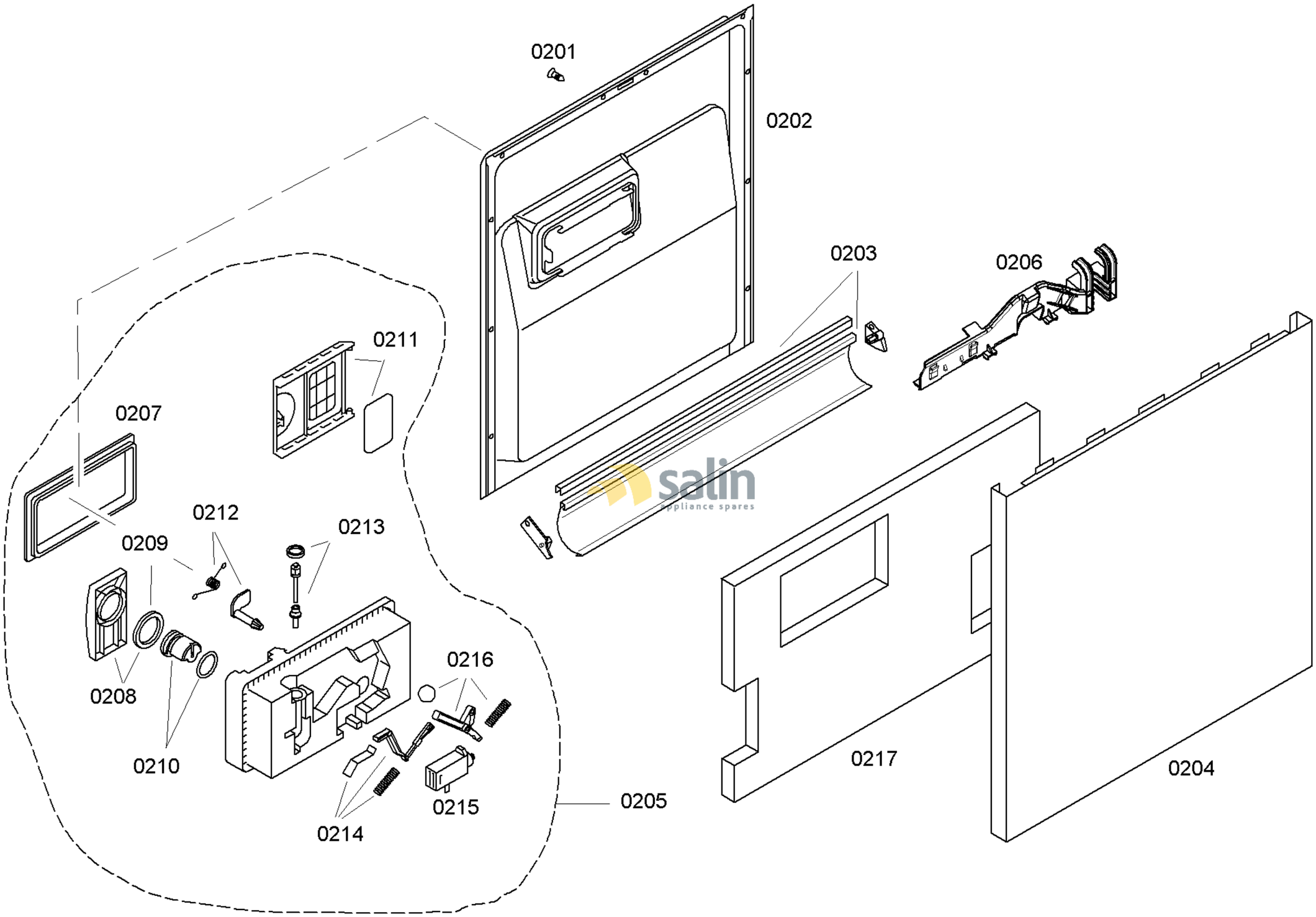


58300000134441 aet 000 a 2/6

FAMILY : SHE43C05UC
MODEL NO: SHE43C05UC/46
Check Position No/Part No or Replacement No

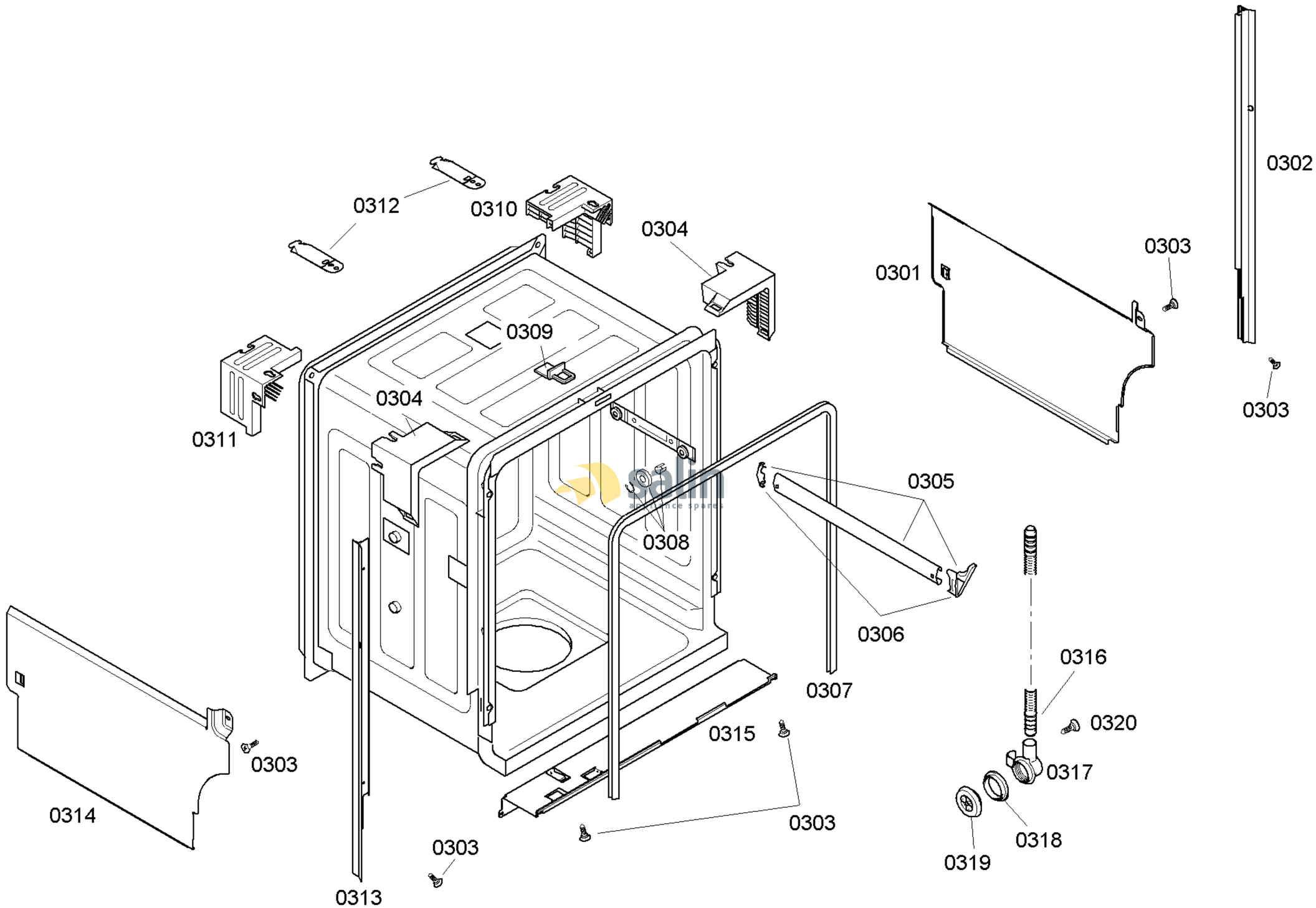


58300000134441 aet 000 a 3/6

FAMILY : SHE43C05UC
MODEL NO: SHE43C05UC/46
Check Position No/Part No or Replacement No

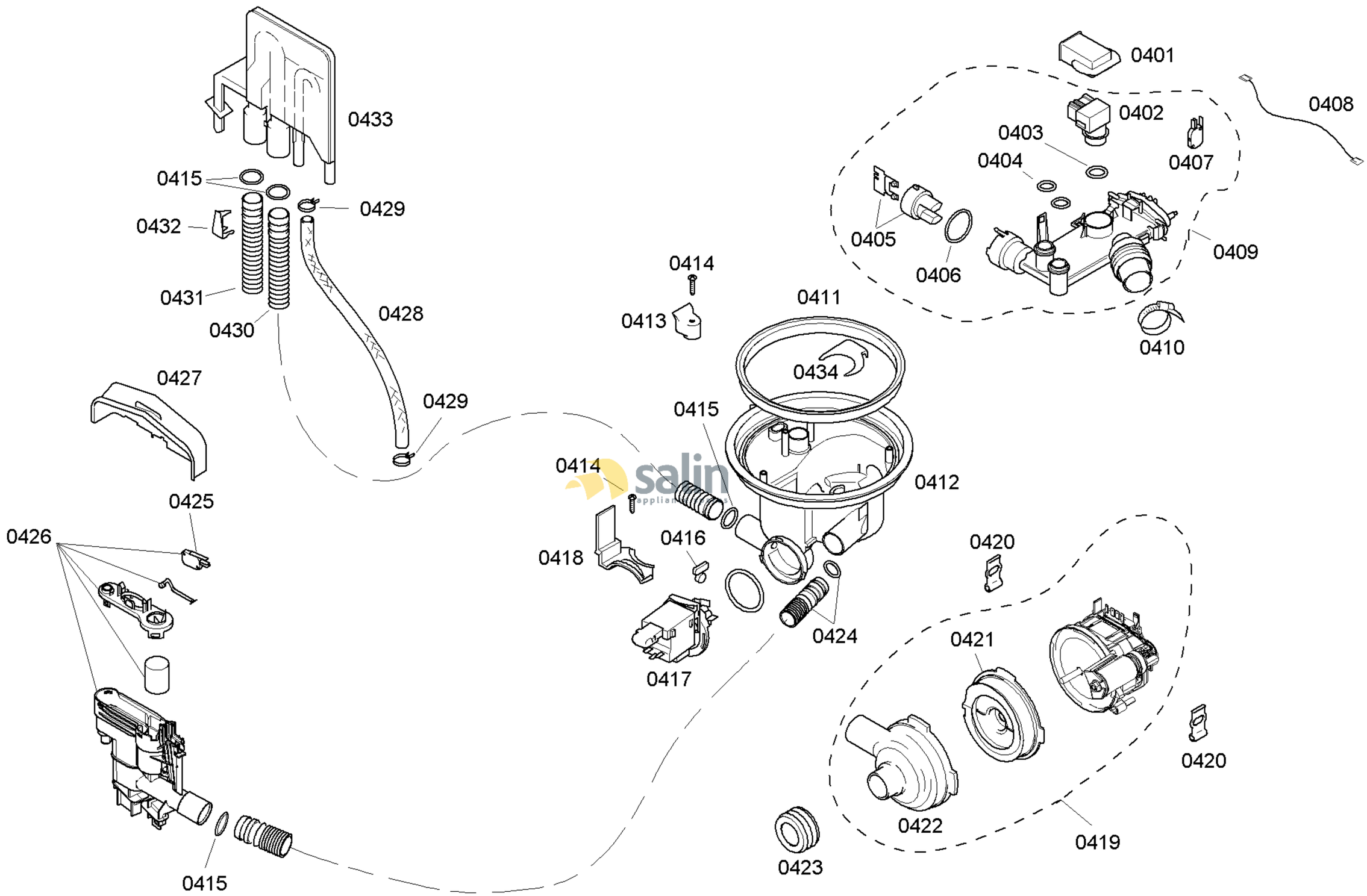


58300000134441 aet 000 a 4/6

FAMILY : SHE43C05UC
MODEL NO: SHE43C05UC/46
Check Position No/Part No or Replacement No

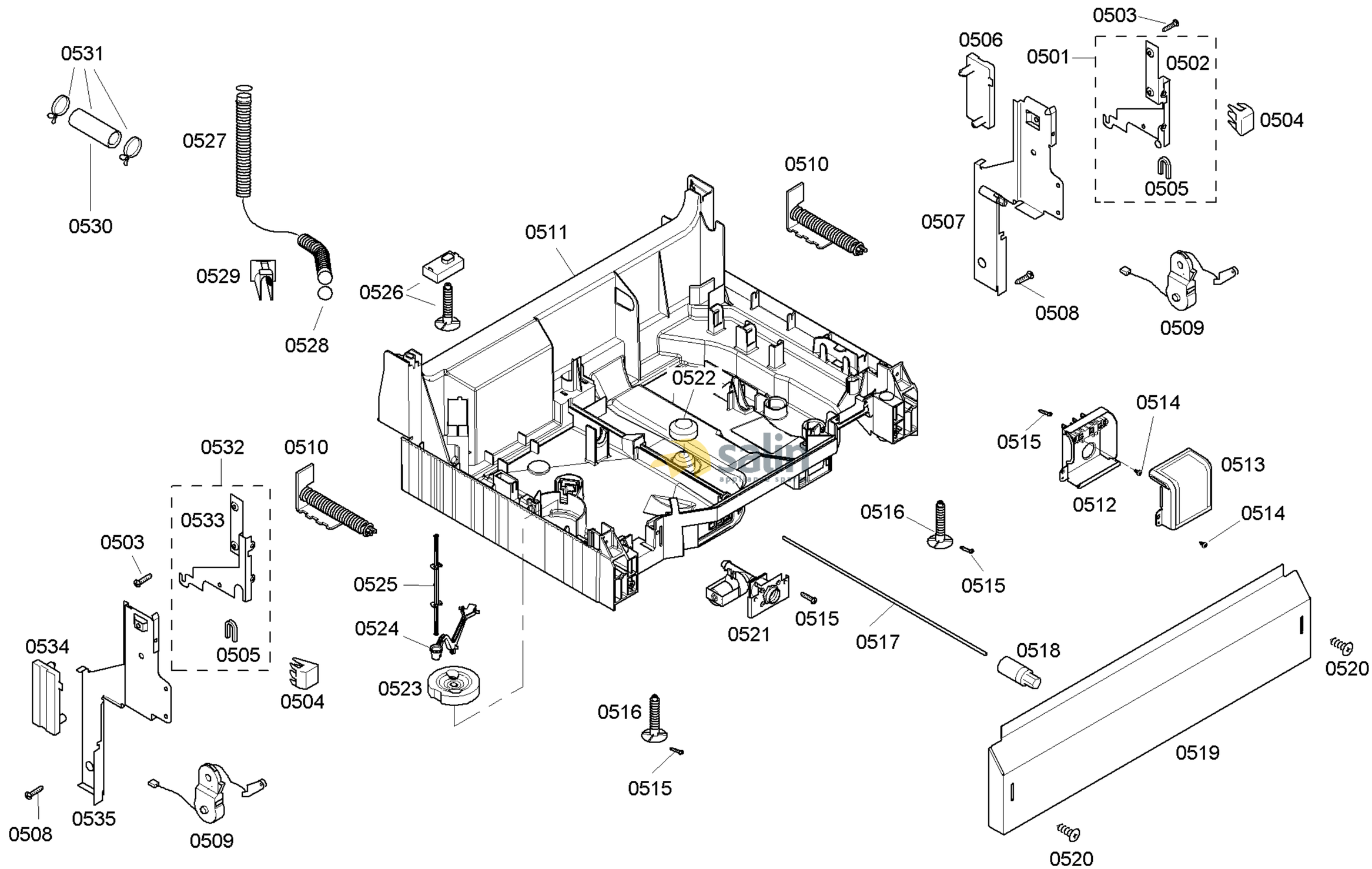


58300000134441 aet 000 a 5/6

FAMILY : SHE43C05UC
MODEL NO: SHE43C05UC/46
Check Position No/Part No or Replacement No

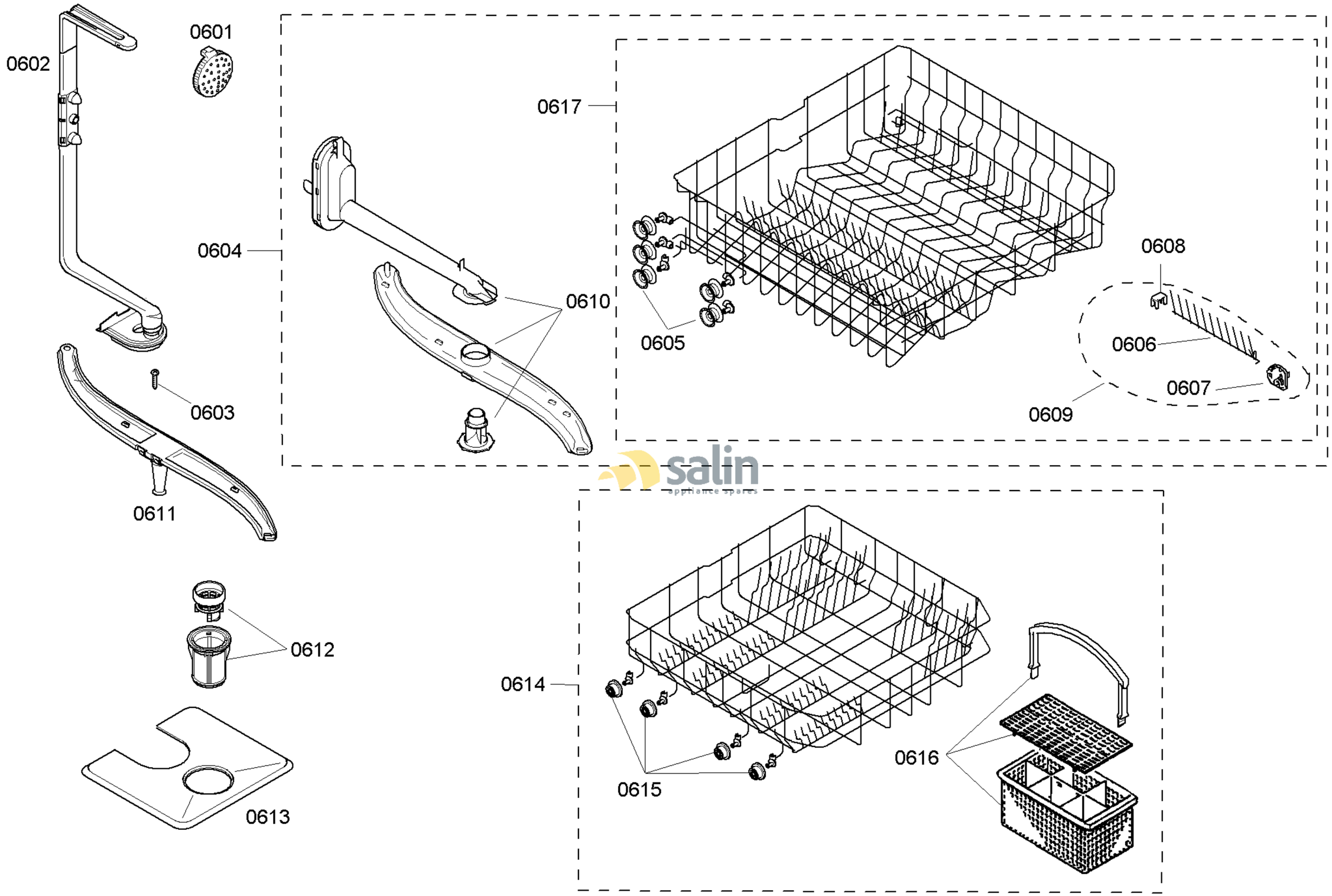


58300000134441 aet 000 a 6/6

FAMILY : SHE43C05UC
MODEL NO: SHE43C05UC/46
Check Position No/Part No or Replacement No