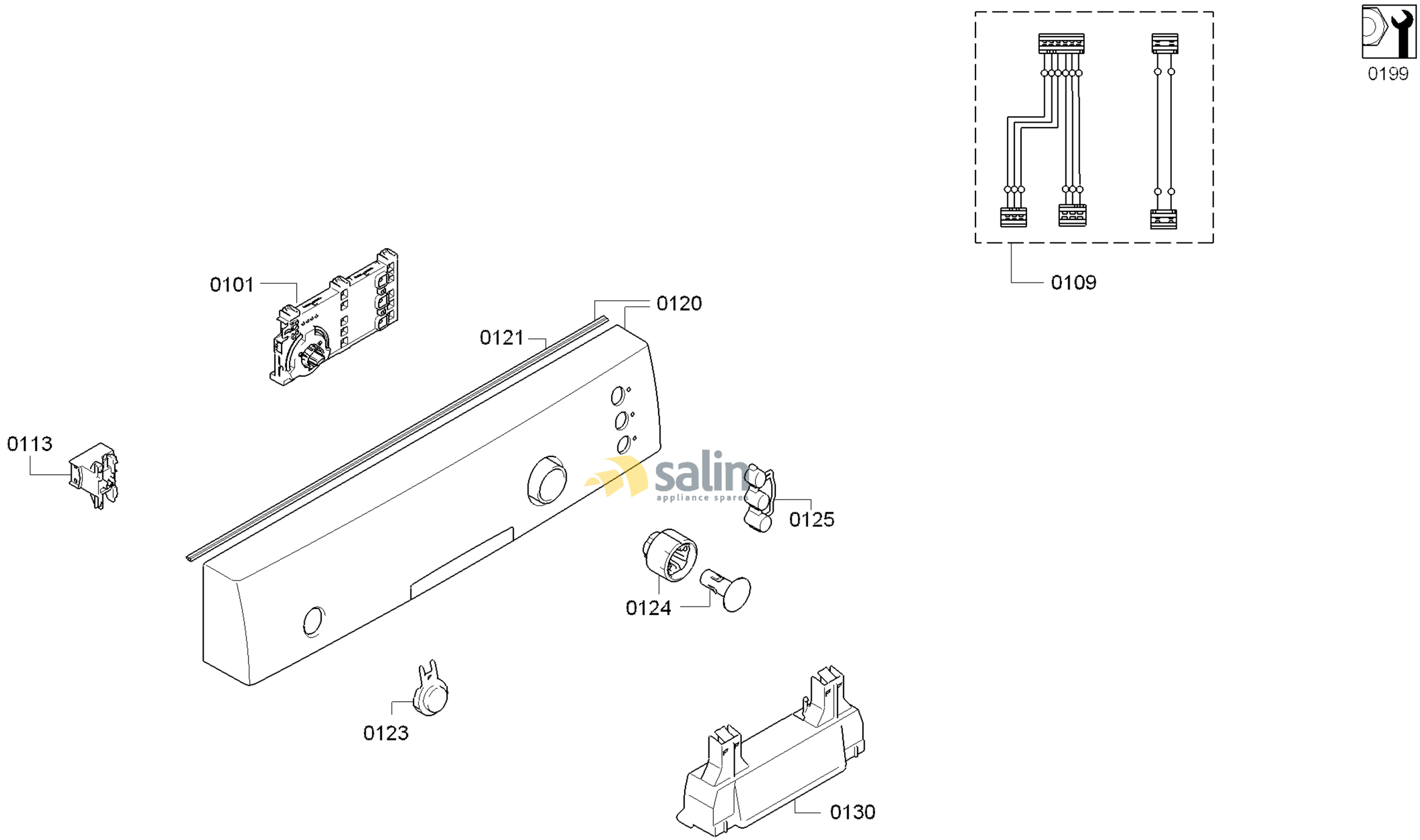

58300000165949 aet 000 a 1/6

FAMILY : SPS40E32EU
MODEL NO: SPS40E32EU/07
Check Position No/Part No or Replacement No

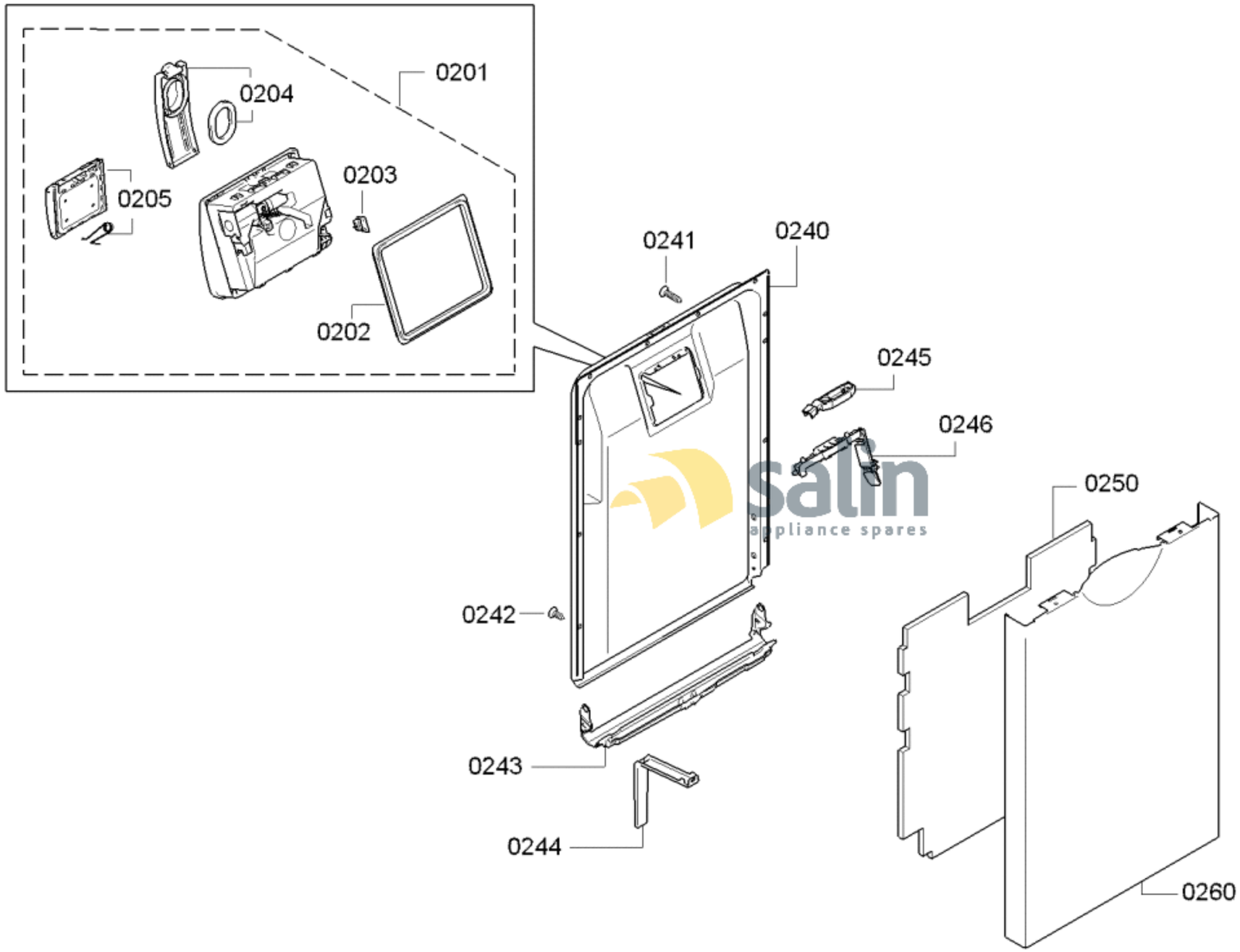

58300000165949 aet 000 a 2/6

FAMILY : SPS40E32EU

MODEL NO: SPS40E32EU/07

Check Position No/Part No or Replacement No

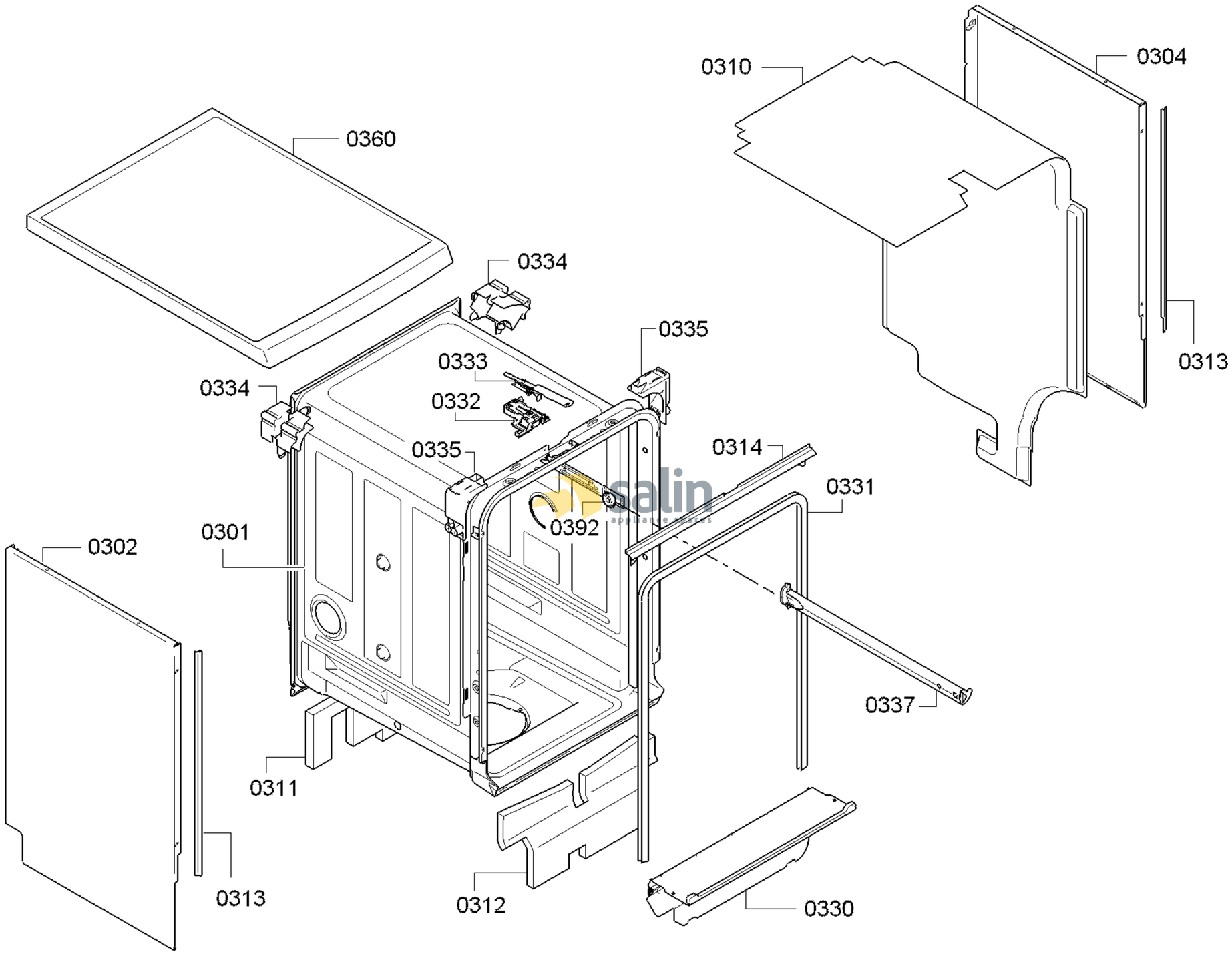

58300000165949 aet 000 a 3/6

FAMILY : SPS40E32EU
MODEL NO: SPS40E32EU/07
Check Position No/Part No or Replacement No

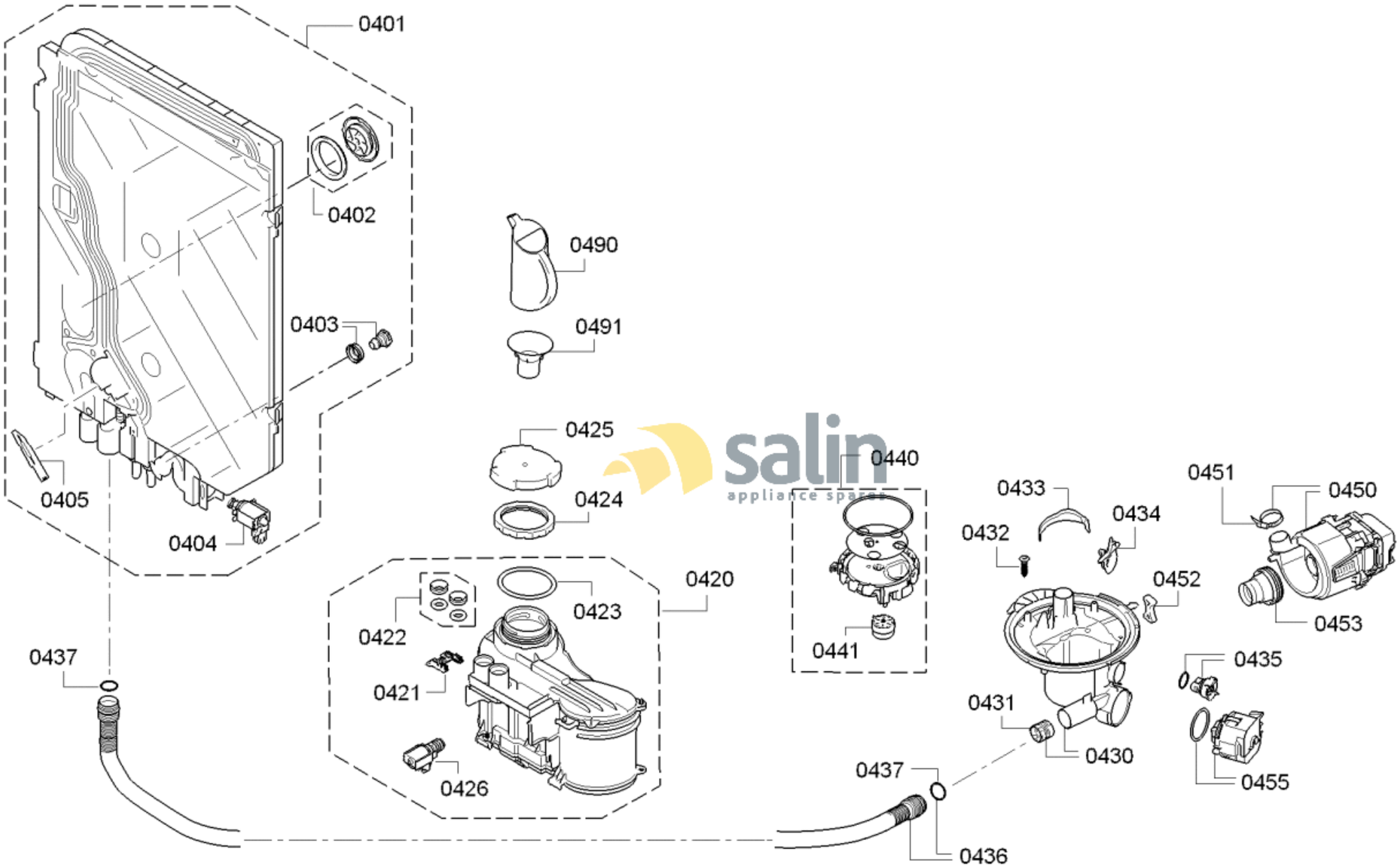

58300000165949 aet 000 a 4/6

FAMILY : SPS40E32EU

MODEL NO: SPS40E32EU/07

Check Position No/Part No or Replacement No

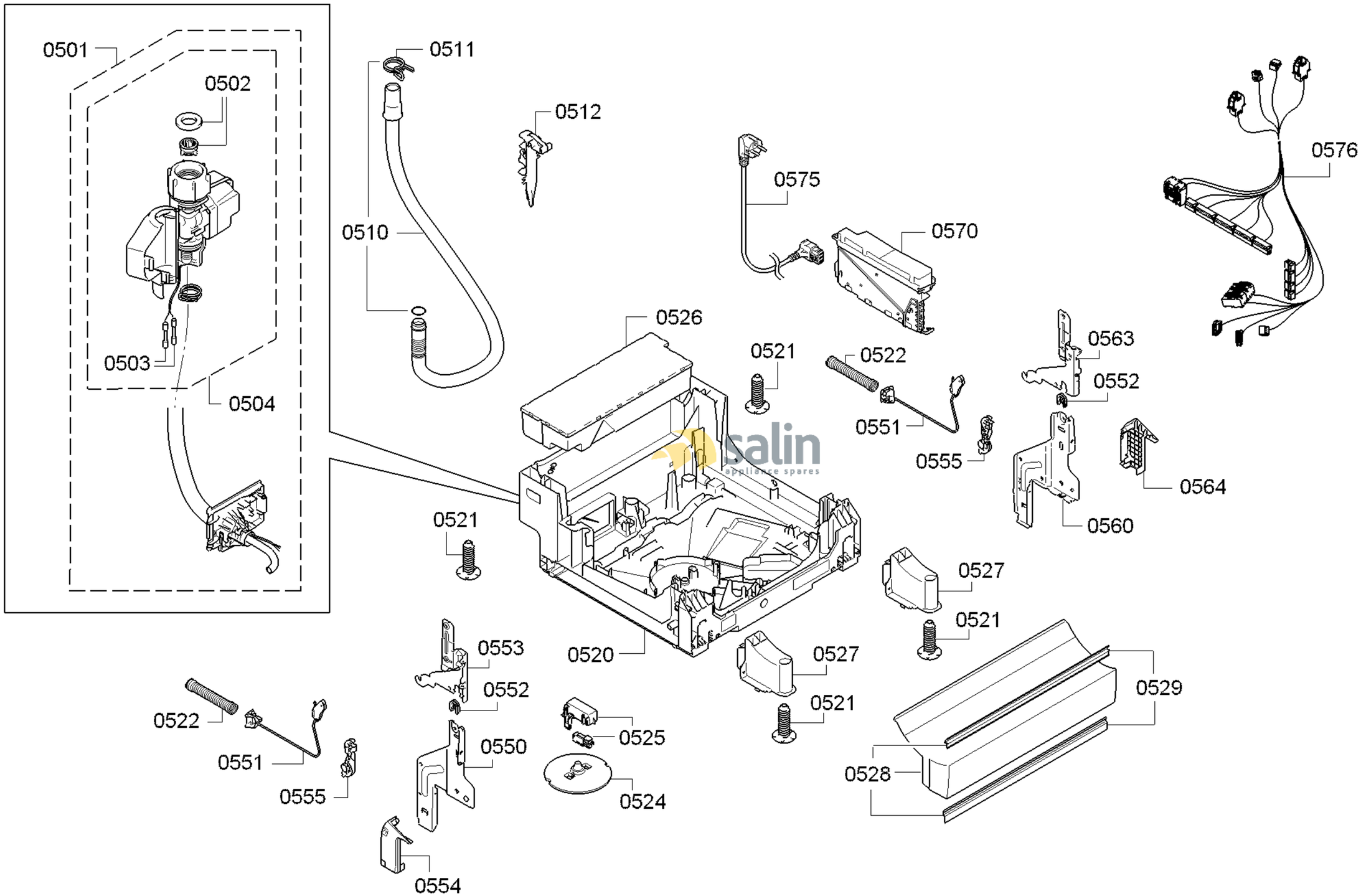

58300000165949 aet 000 a 5/6

FAMILY : SPS40E32EU
MODEL NO: SPS40E32EU/07
Check Position No/Part No or Replacement No

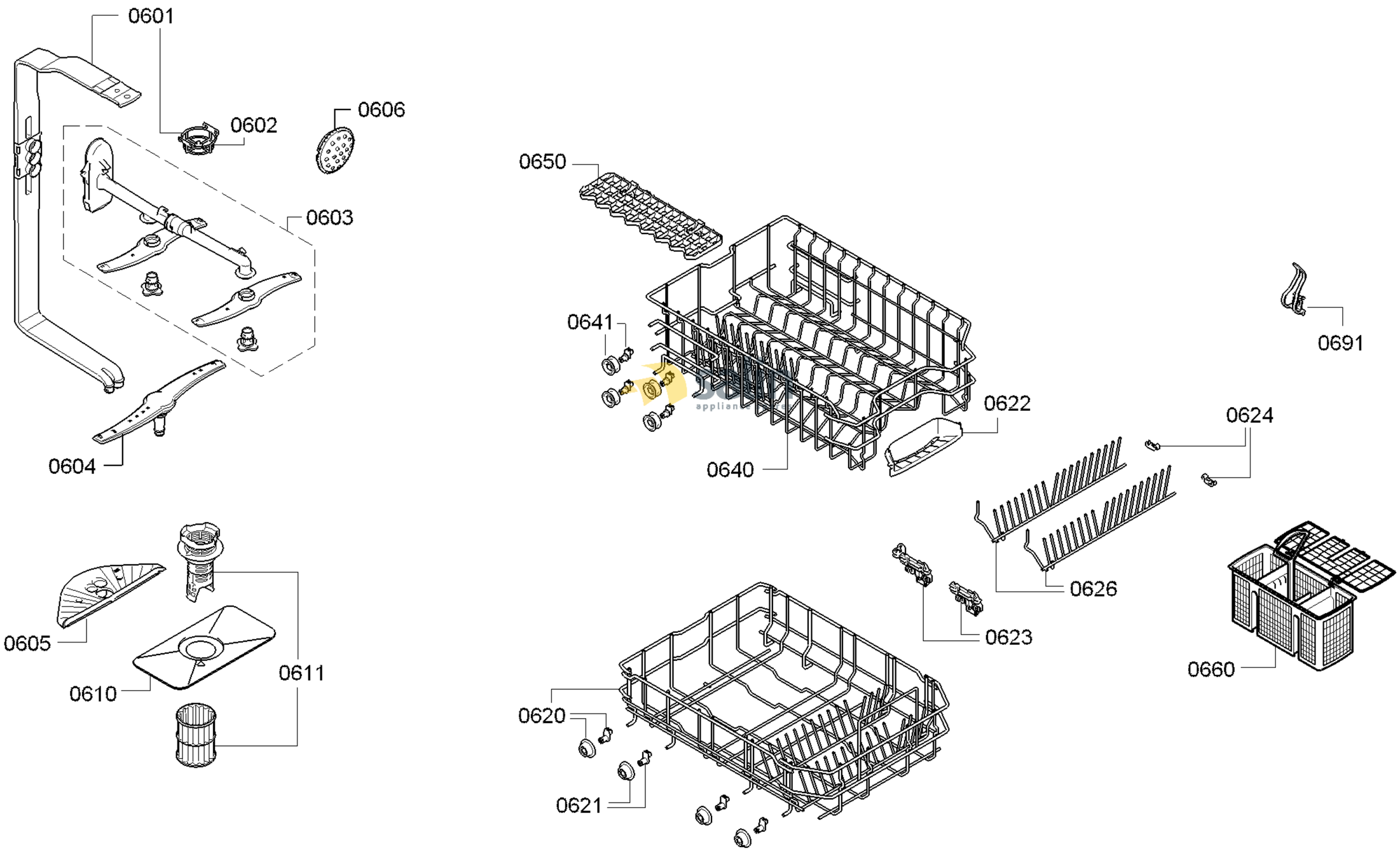

58300000165949 aet 000 a 6/6

FAMILY : SPS40E32EU
MODEL NO: SPS40E32EU/07
Check Position No/Part No or Replacement No