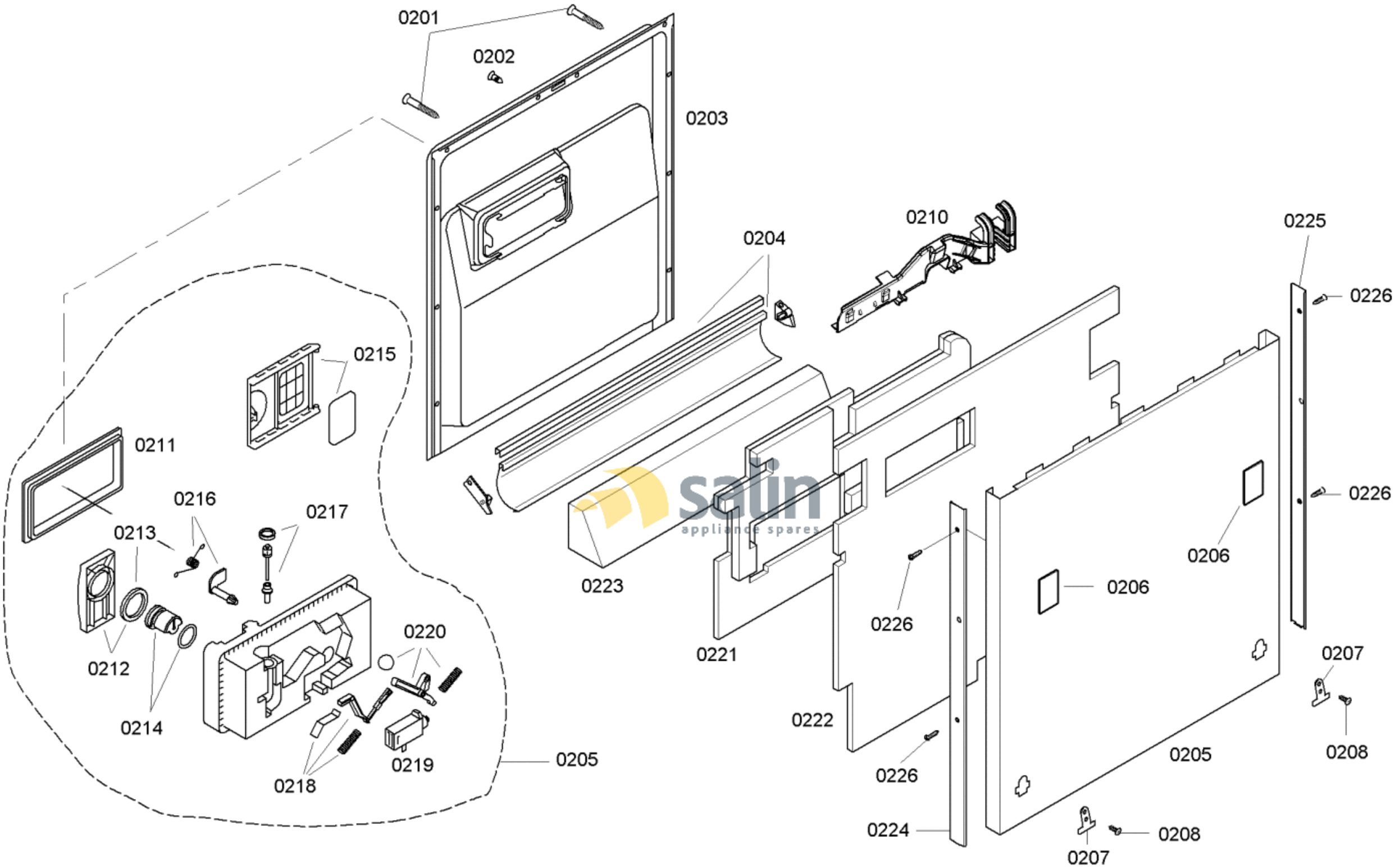

58300000127147 aet 000 b 2/6

FAMILY : SHV98M03UC

MODEL NO: SHV98M03UC/46

Check Position No/Part No or Replacement No

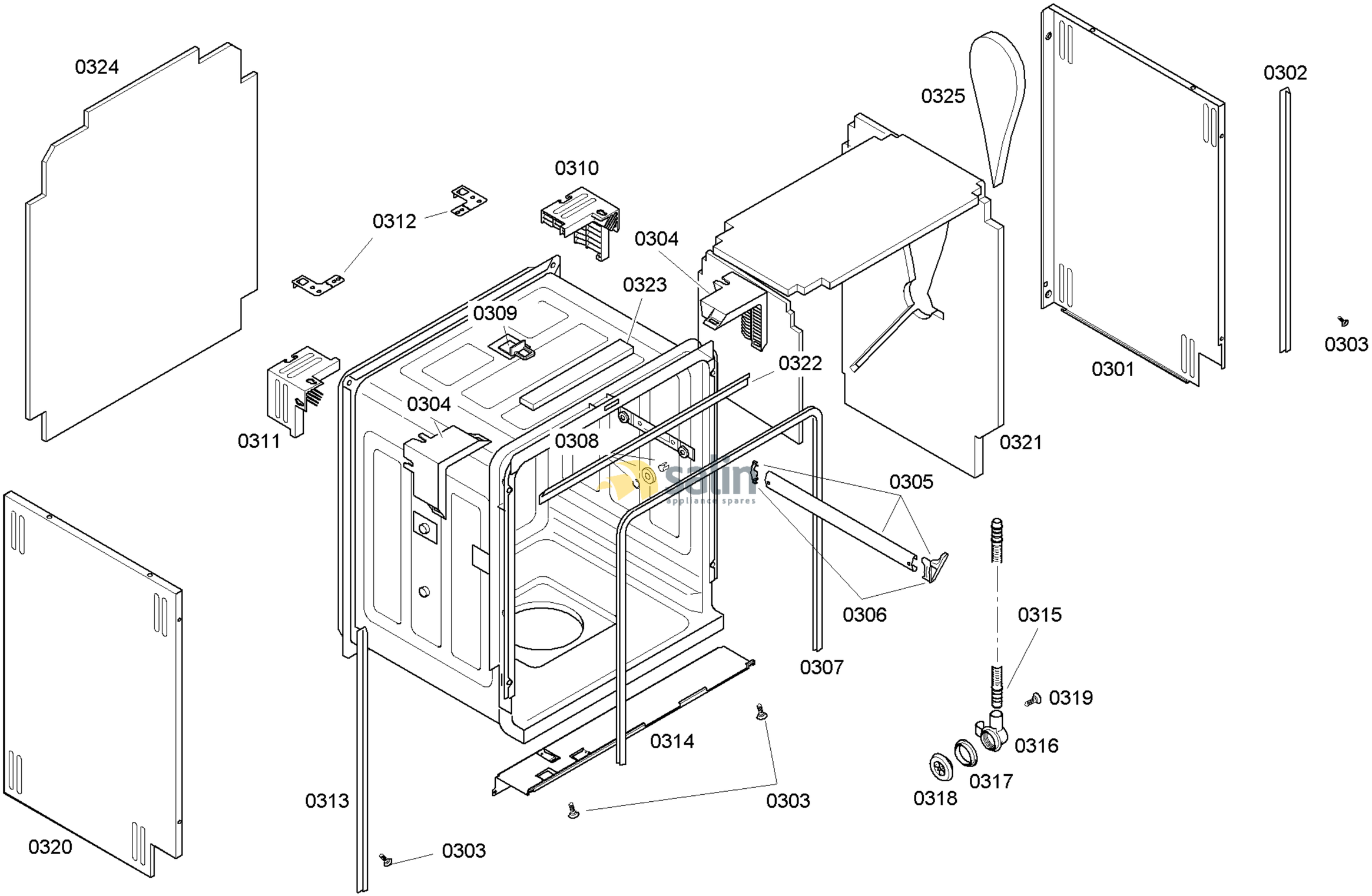

58300000127147 aet 000 b 3/6

FAMILY : SHV98M03UC
MODEL NO: SHV98M03UC/46
Check Position No/Part No or Replacement No

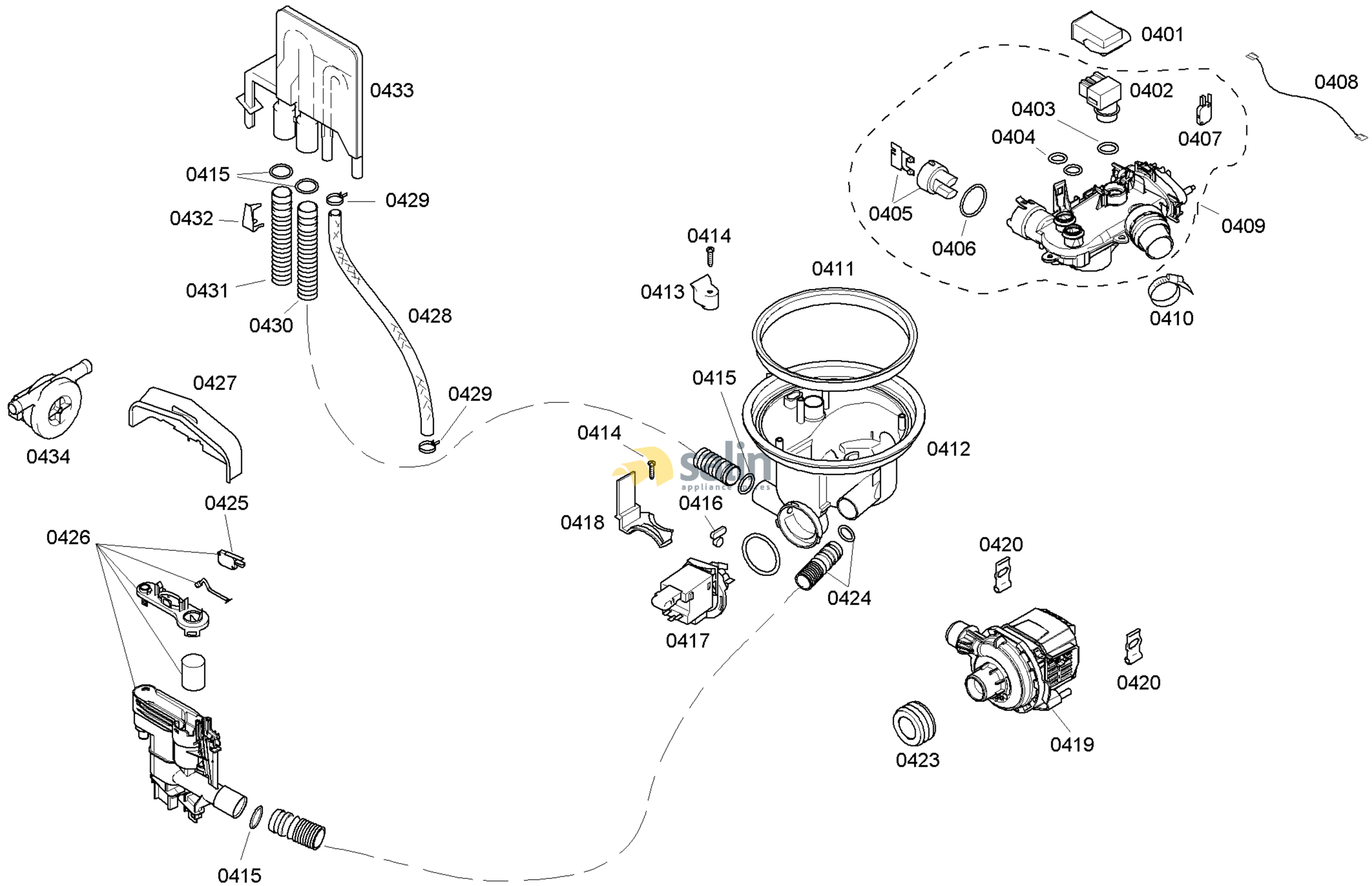

58300000127147 aet 000 b 4/6

FAMILY : SHV98M03UC
MODEL NO: SHV98M03UC/46
Check Position No/Part No or Replacement No

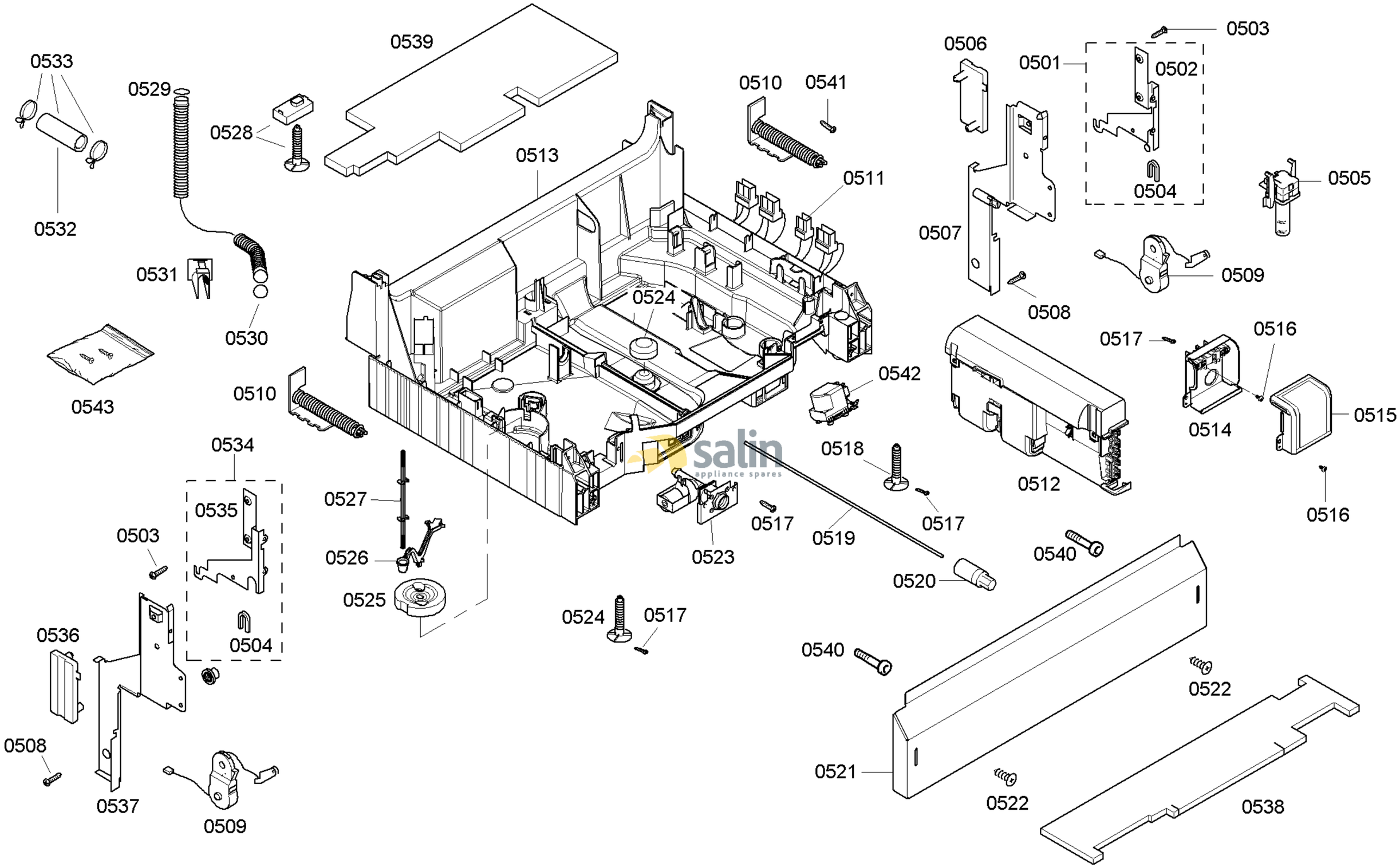

58300000127147 aet 000 b 5/6

FAMILY : SHV98M03UC
MODEL NO: SHV98M03UC/46
Check Position No/Part No or Replacement No

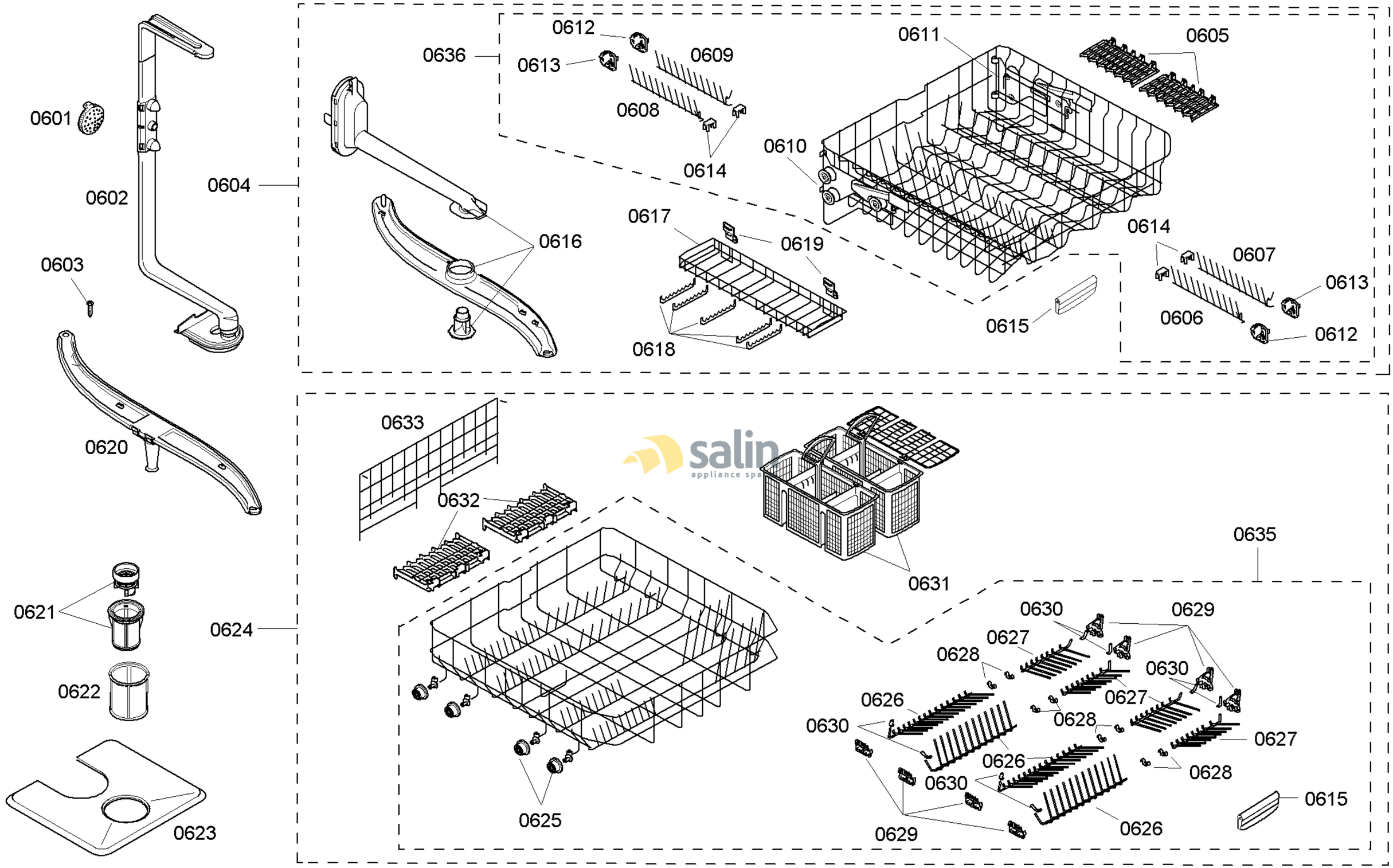

58300000127147 aet 000 b 6/6

FAMILY : SHV98M03UC
MODEL NO: SHV98M03UC/46
Check Position No/Part No or Replacement No