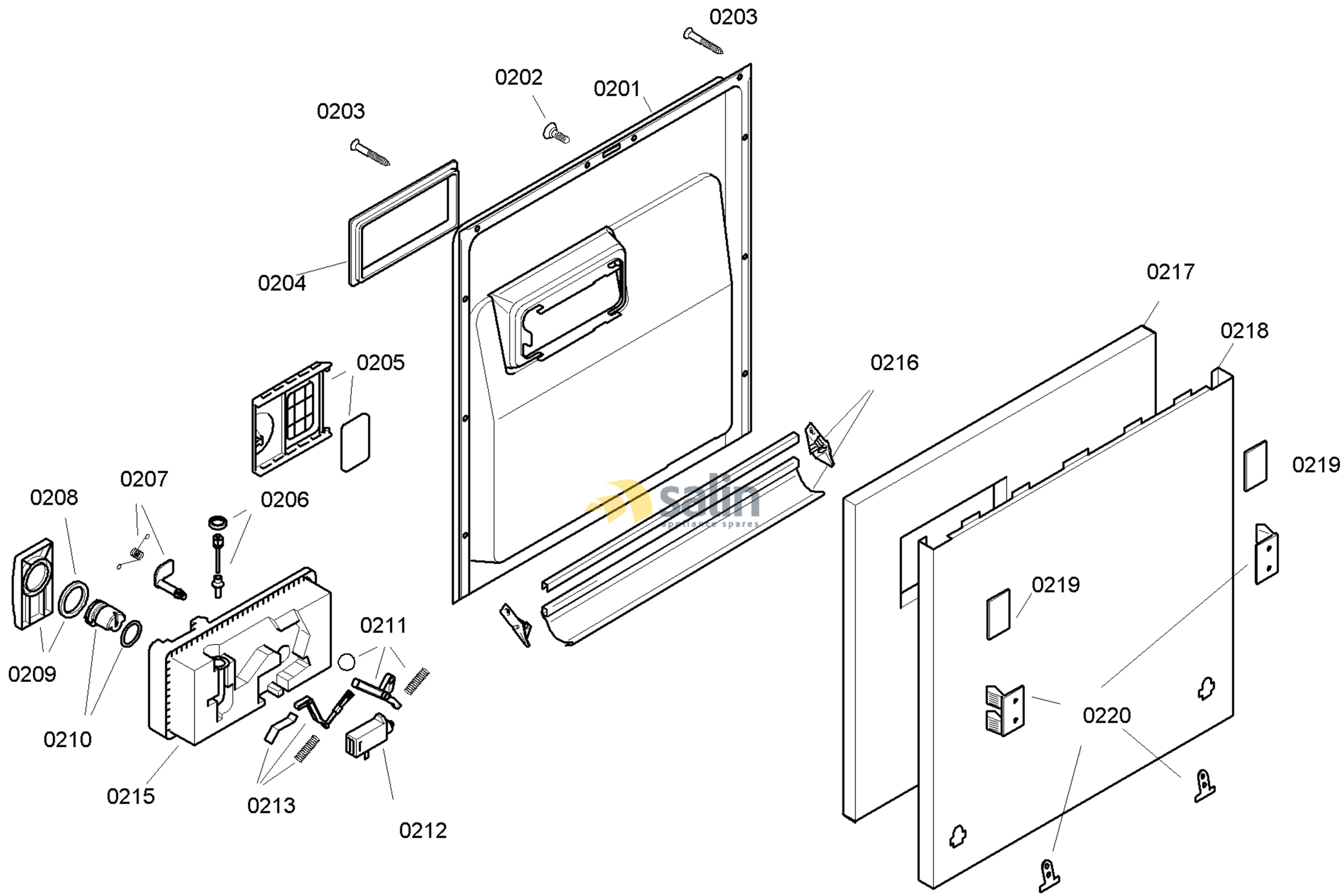

58300000119380 aet 000 c 2/6

FAMILY : SGI45M45EP
MODEL NO: SGI45M45EP/75
Check Position No/Part No or Replacement No

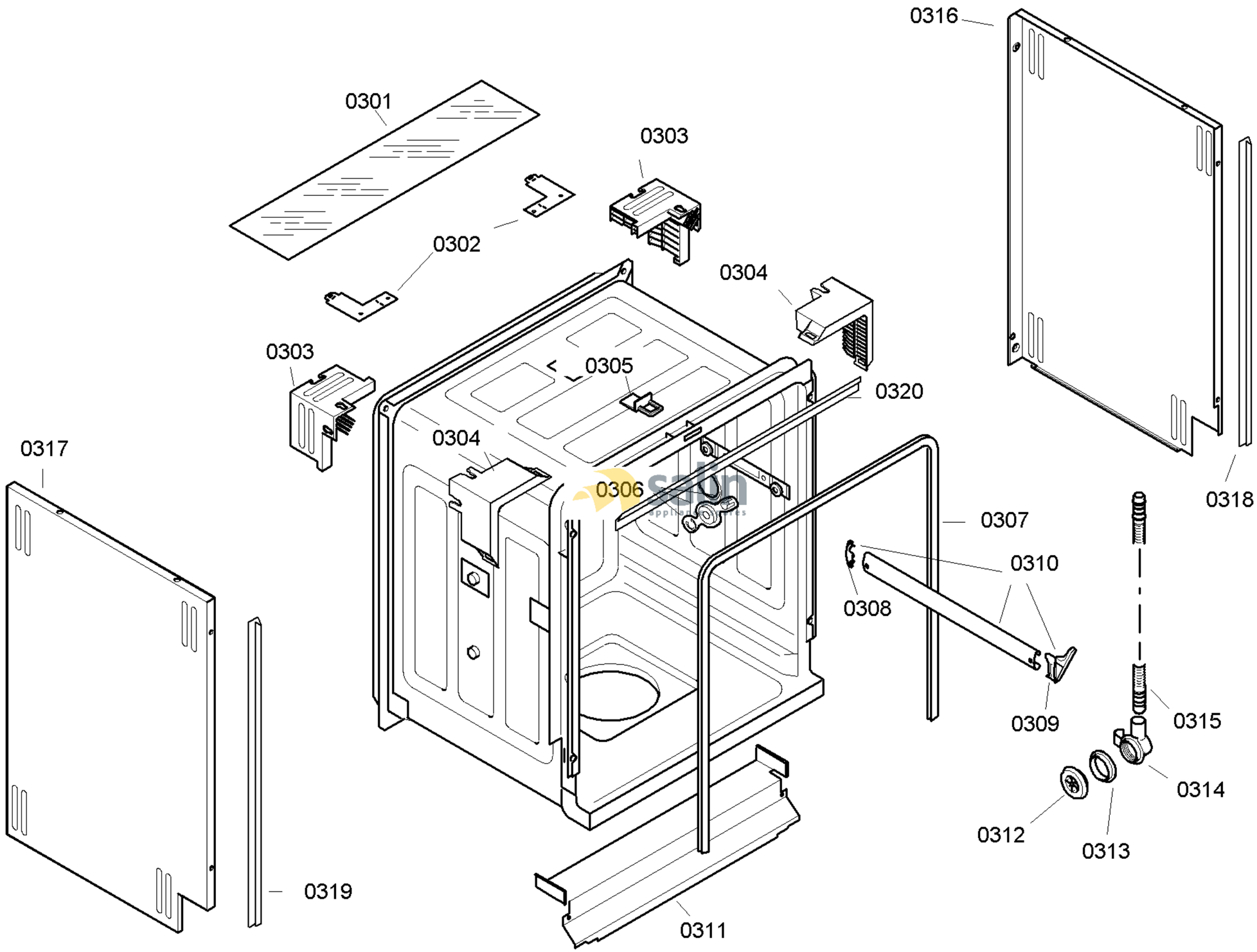

58300000119380 aet 000 c 3/6

FAMILY : SGI45M45EP
MODEL NO: SGI45M45EP/75
Check Position No/Part No or Replacement No

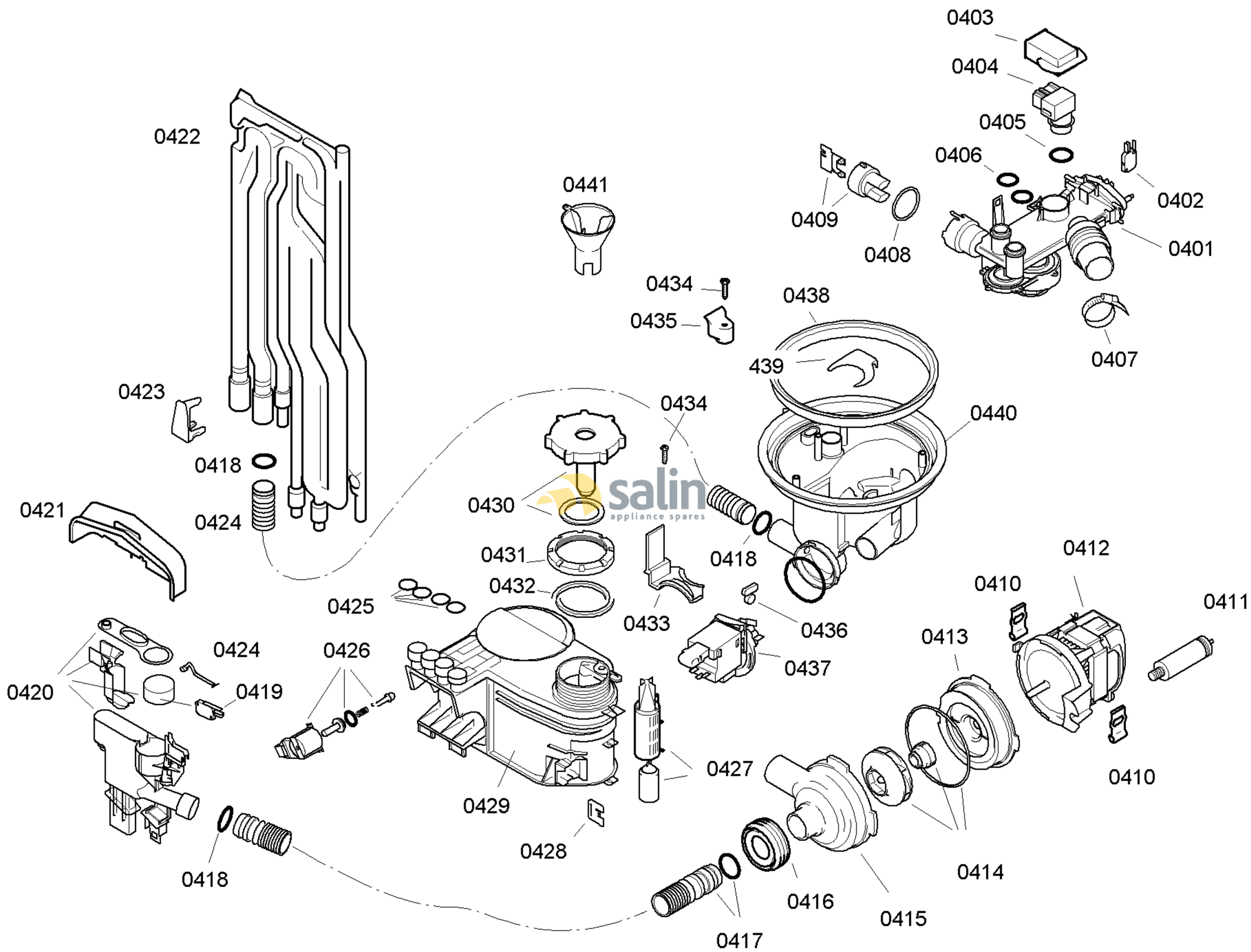

58300000119380 aet 000 c 4/6

FAMILY : SGI45M45EP
MODEL NO: SGI45M45EP/75
Check Position No/Part No or Replacement No

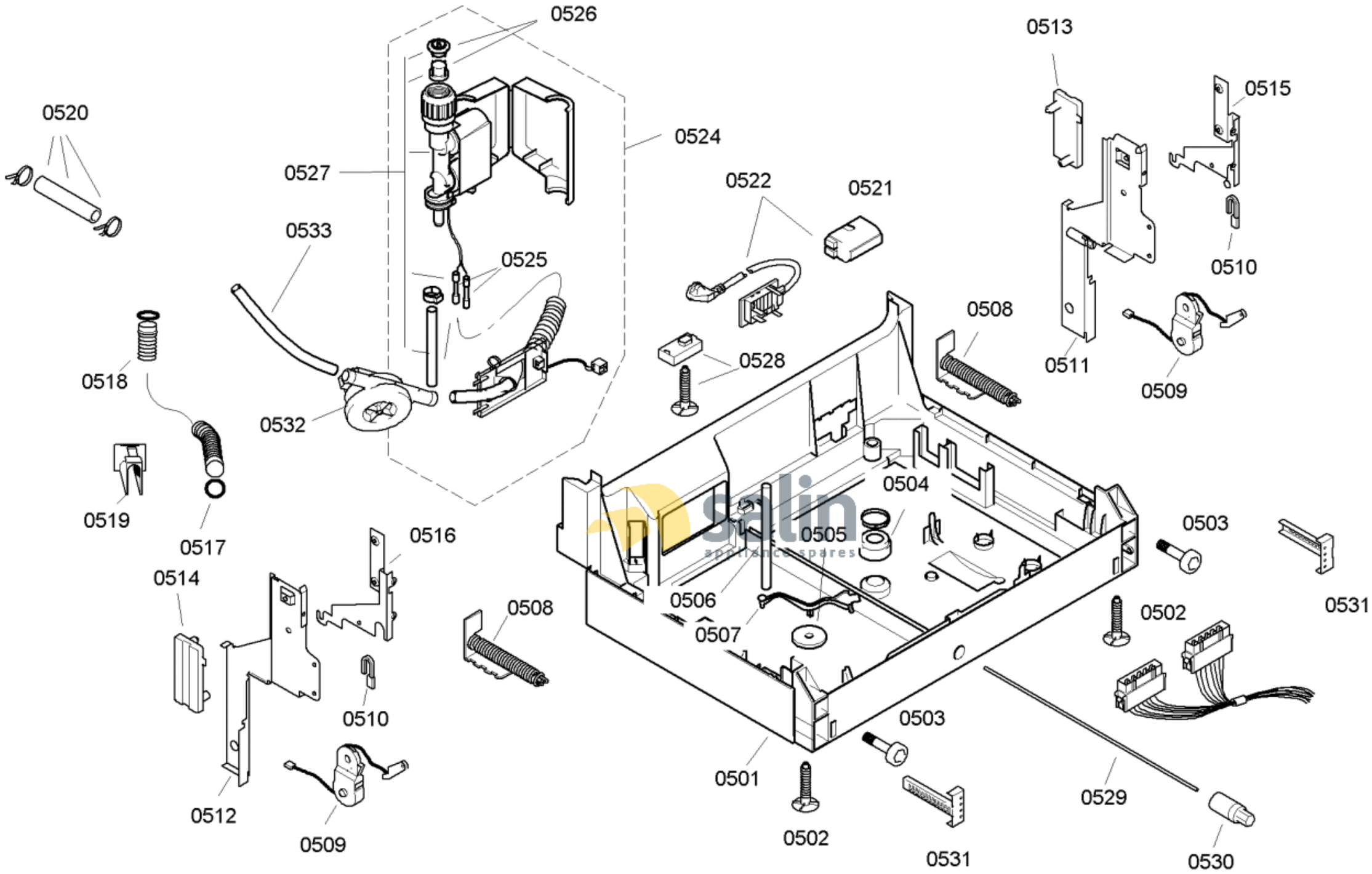

58300000119380 aet 000 c 5/6

FAMILY : SGI45M45EP

MODEL NO: SGI45M45EP/75

Check Position No/Part No or Replacement No

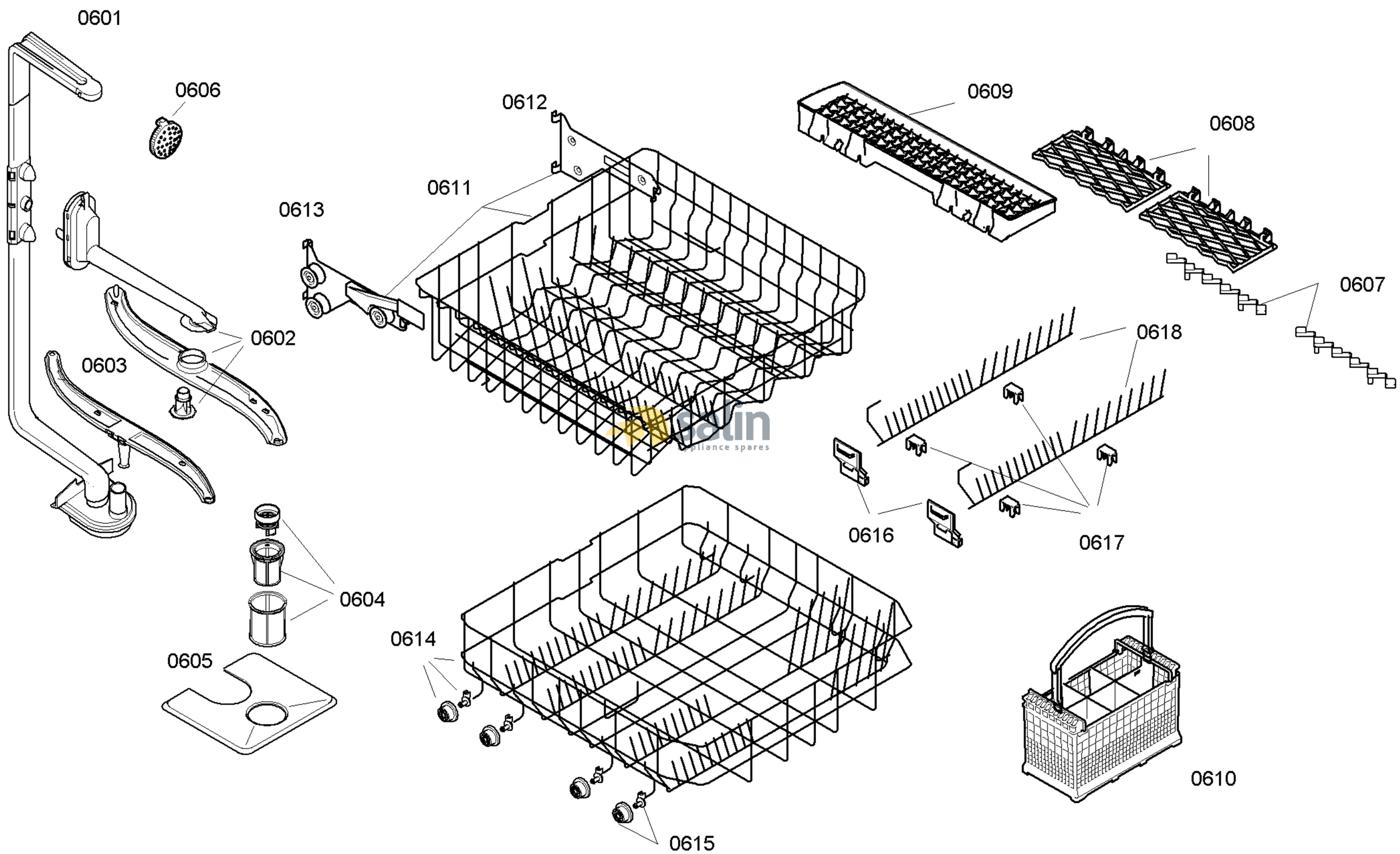

58300000119380 aet 000 c 6/6

FAMILY : SGI45M45EP
MODEL NO: SGI45M45EP/75
Check Position No/Part No or Replacement No