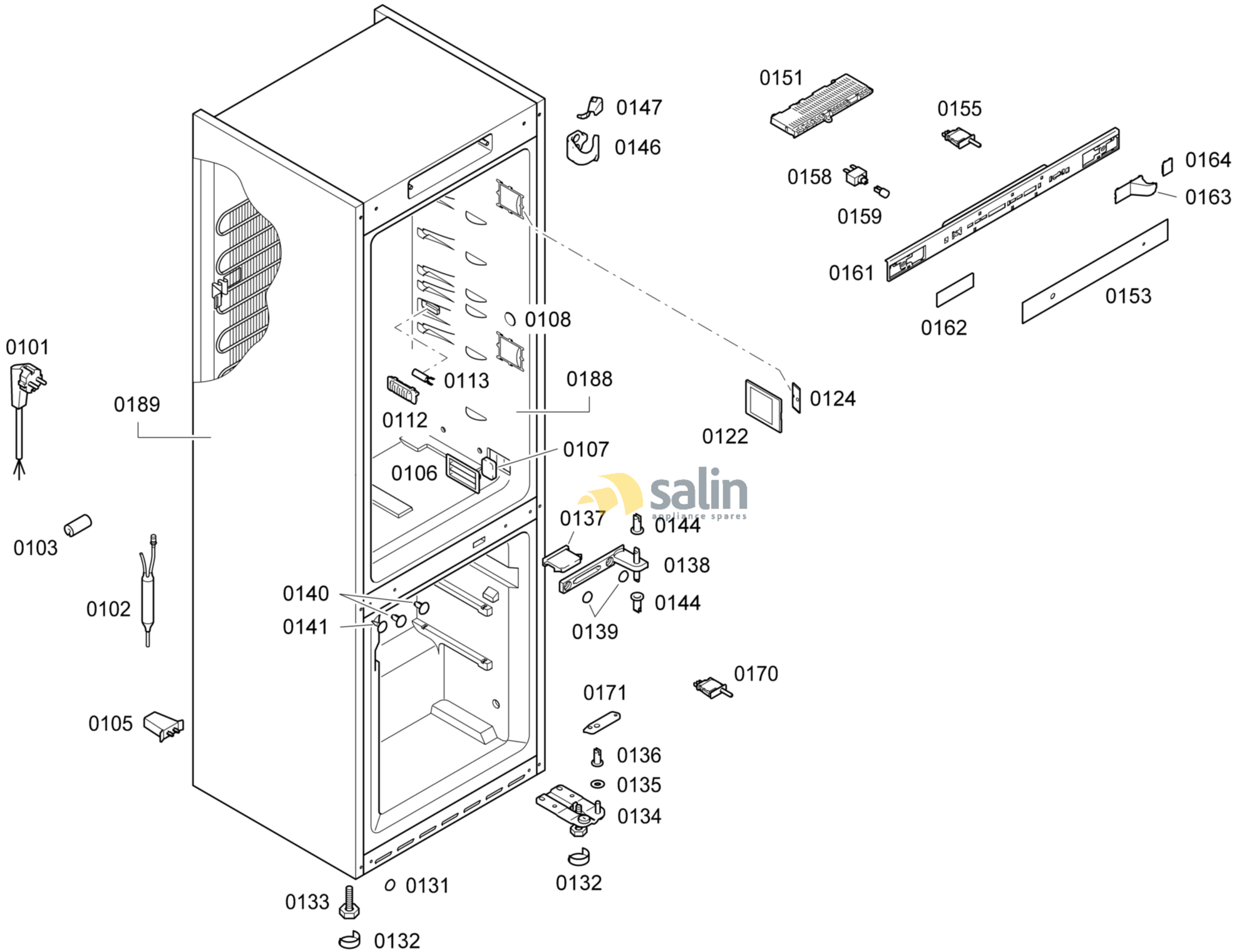

58300000174316 aet 000 a 1/4

FAMILY : KGN36S53
MODEL NO: KGN36S53/23
Check Position No/Part No or Replacement No

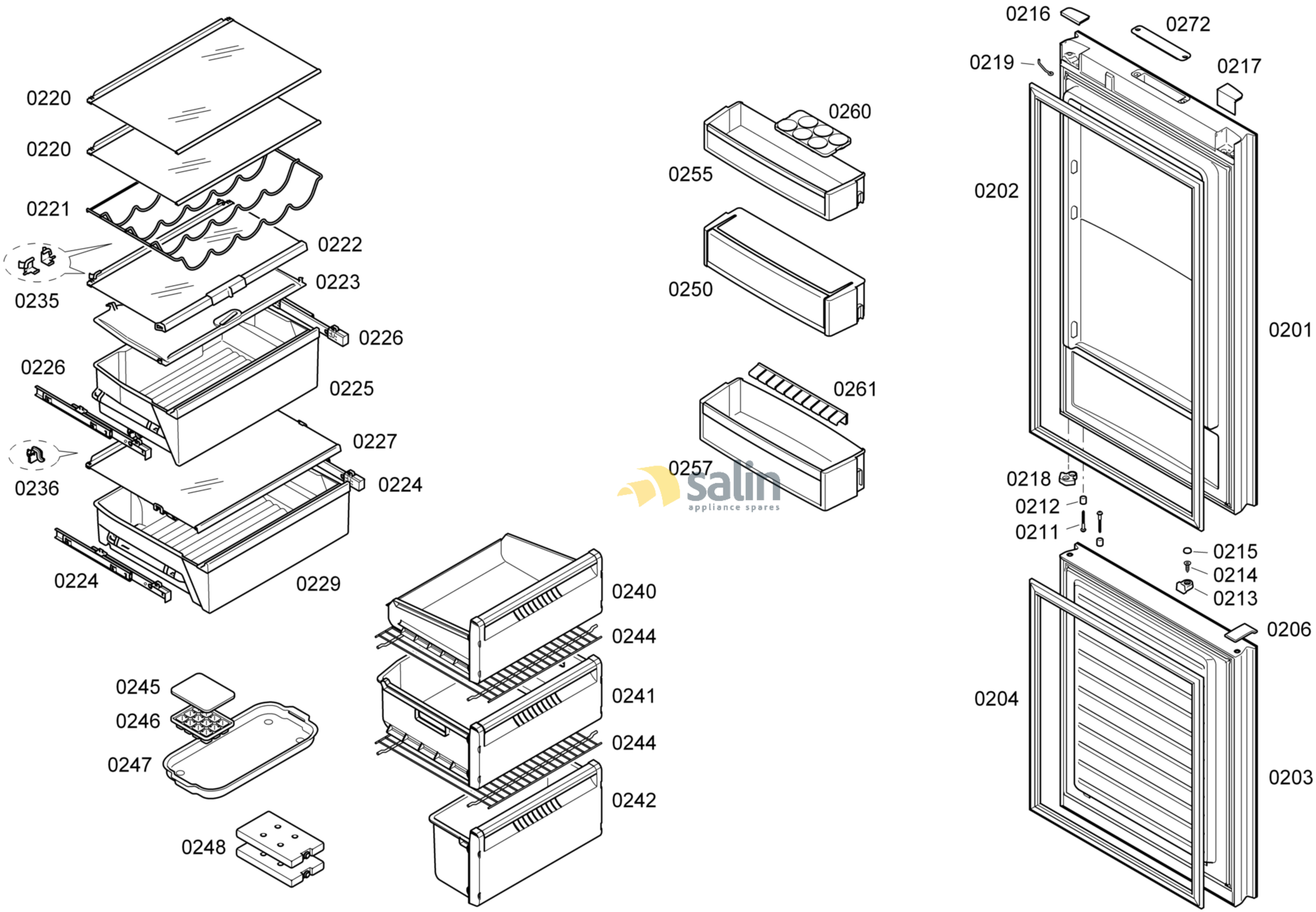

salin appliance spares

58300000174316 aet 000 a 2/4

FAMILY : KGN36S53

MODEL NO: KGN36S53/23

Check Position No/Part No or Replacement No

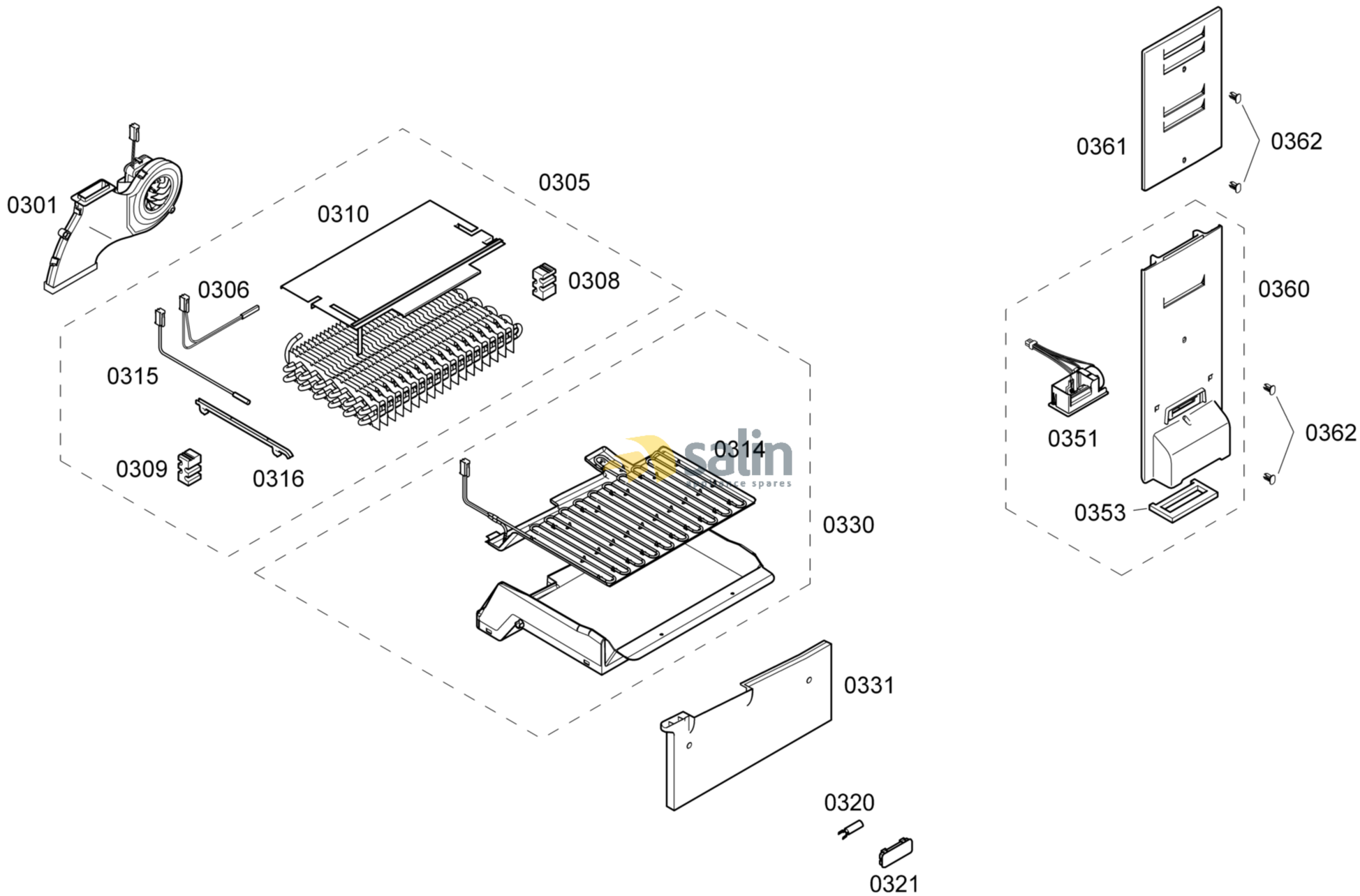

58300000174316 aet 000 a 3/4

FAMILY : KGN36S53
MODEL NO: KGN36S53/23
Check Position No/Part No or Replacement No