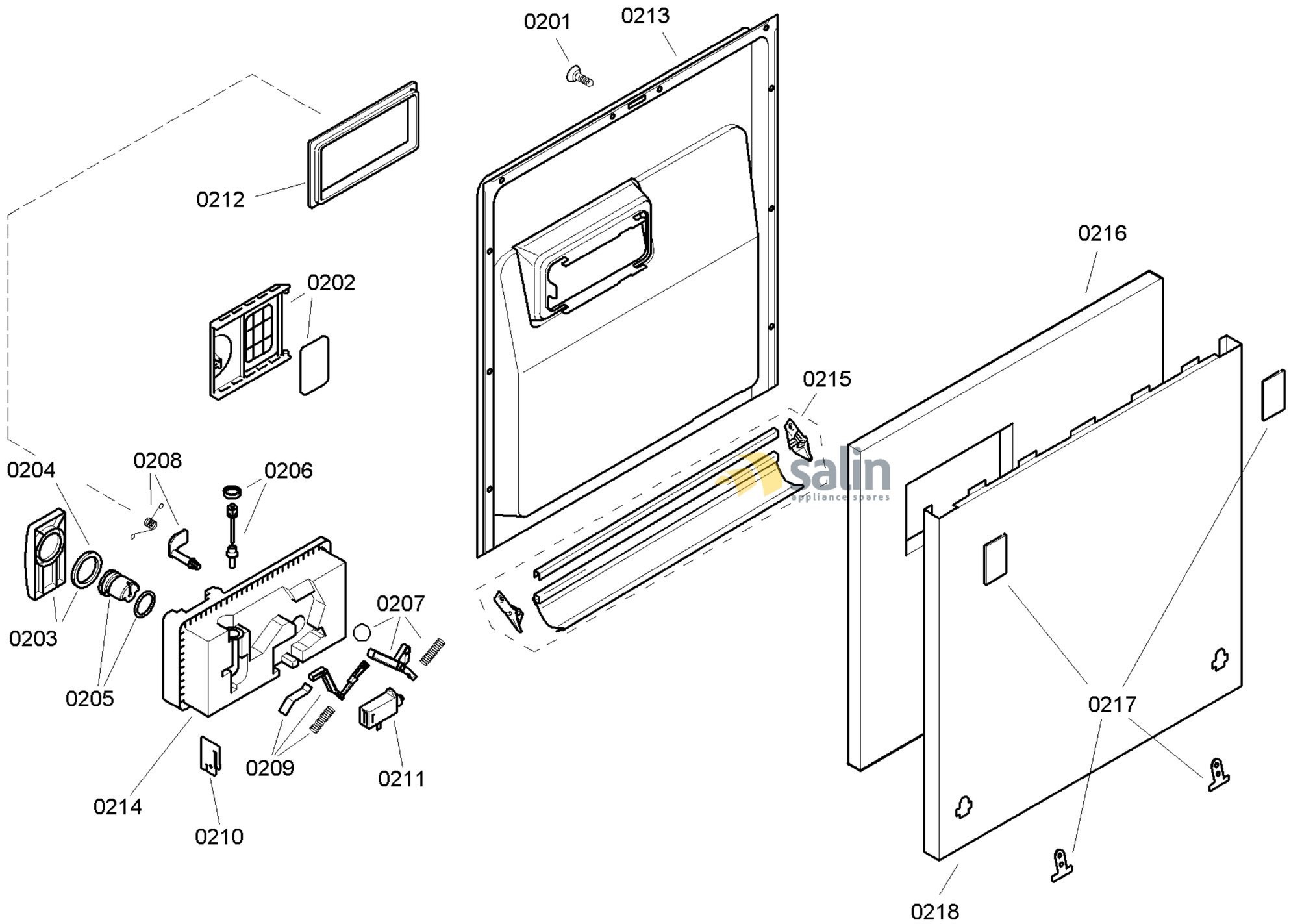

58300000125039 aet 000 b 2/6

FAMILY : SHV33E23EU
MODEL NO: SHV33E23EU/29
Check Position No/Part No or Replacement No

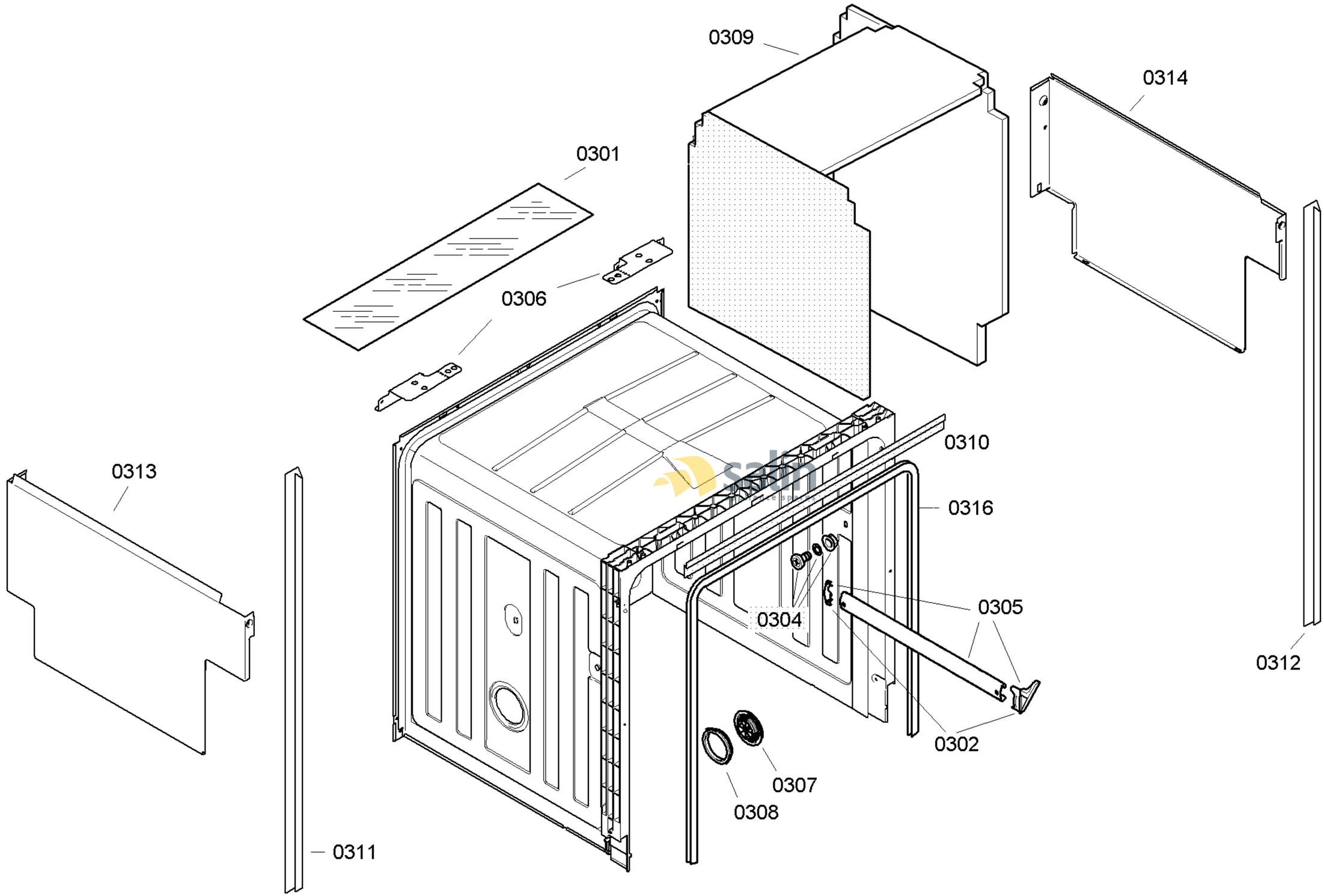

58300000125039 aet 000 b 3/6

FAMILY : SHV33E23EU
MODEL NO: SHV33E23EU/29
Check Position No/Part No or Replacement No

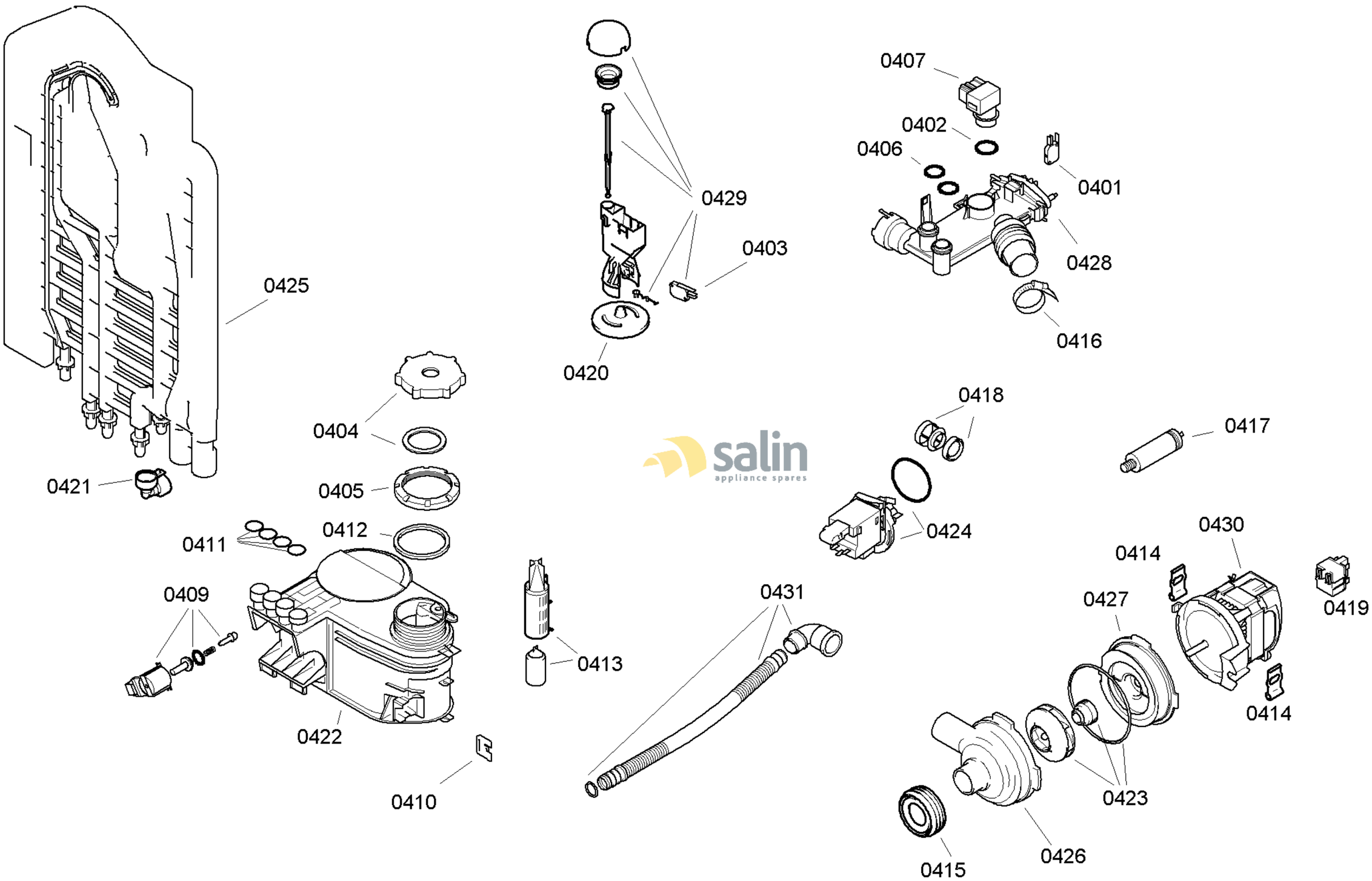

58300000125039 aet 000 b 4/6

FAMILY : SHV33E23EU
MODEL NO: SHV33E23EU/29
Check Position No/Part No or Replacement No

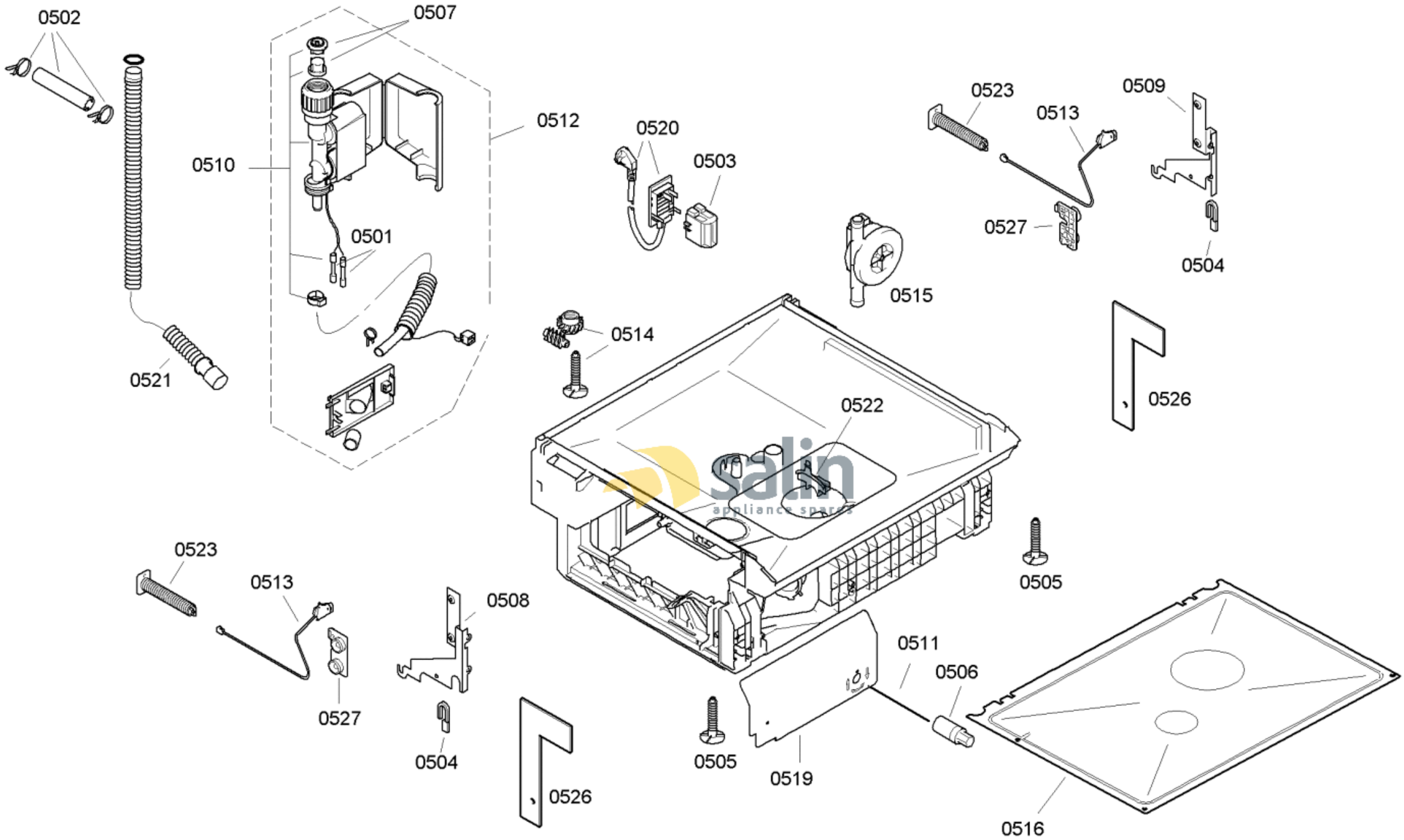

58300000125039 aet 000 b 5/6

FAMILY : SHV33E23EU

MODEL NO: SHV33E23EU/29

Check Position No/Part No or Replacement No

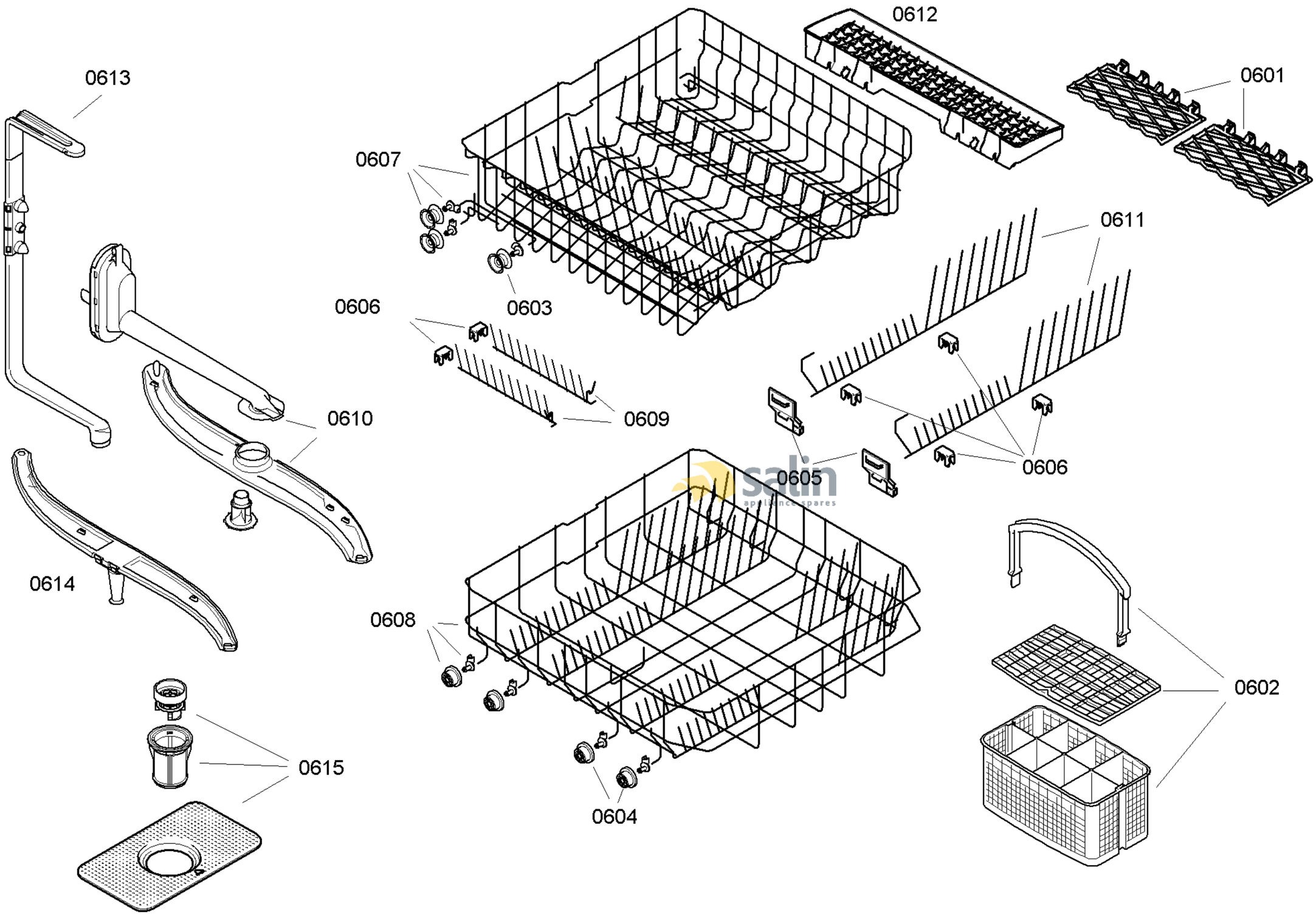

58300000125039 aet 000 b 6/6

FAMILY : SHV33E23EU
MODEL NO: SHV33E23EU/29
Check Position No/Part No or Replacement No