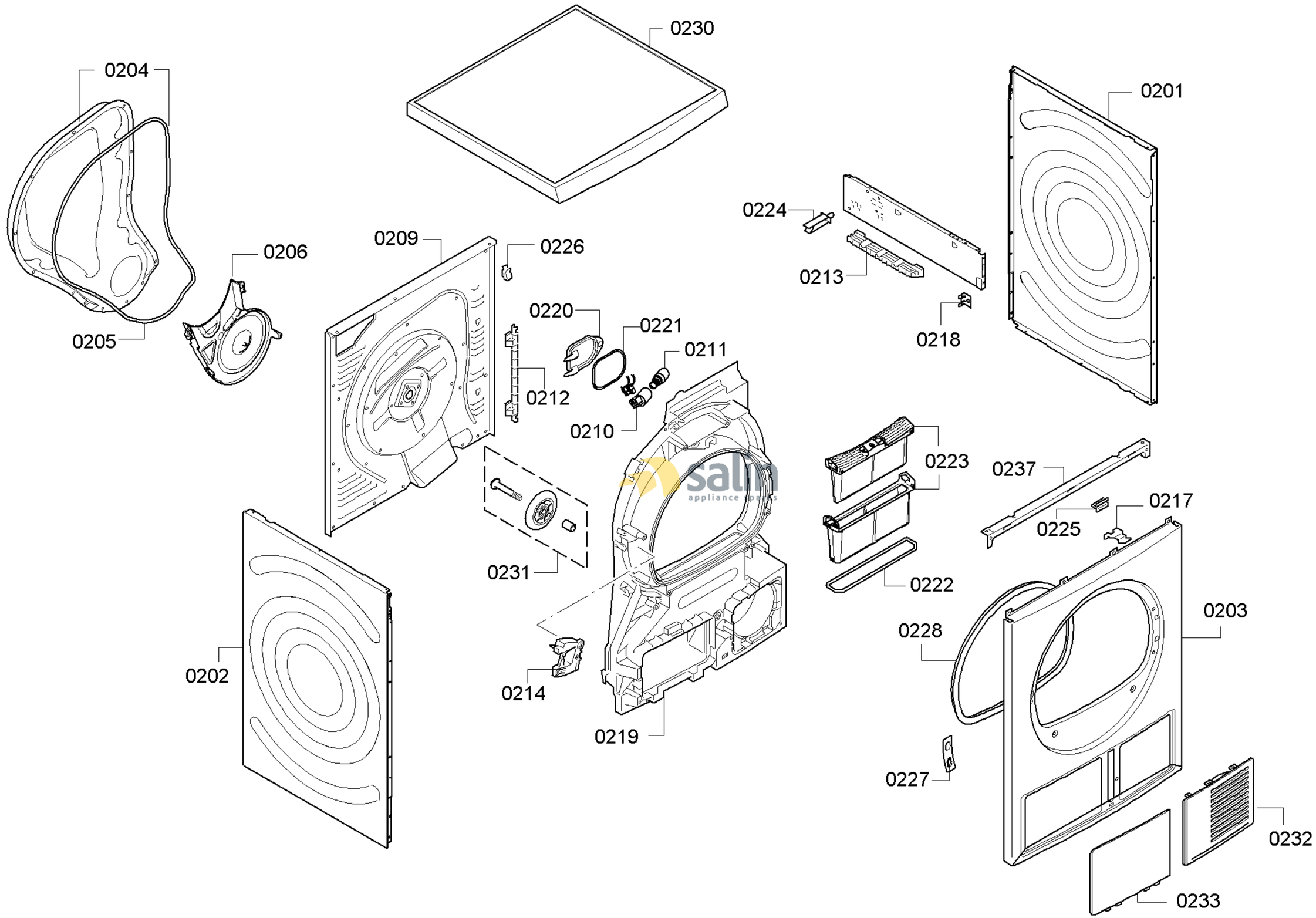

58300000162604 aet 000 a 2/6

FAMILY : WTW86563BY
MODEL NO: WTW86563BY/02
Check Position No/Part No or Replacement No

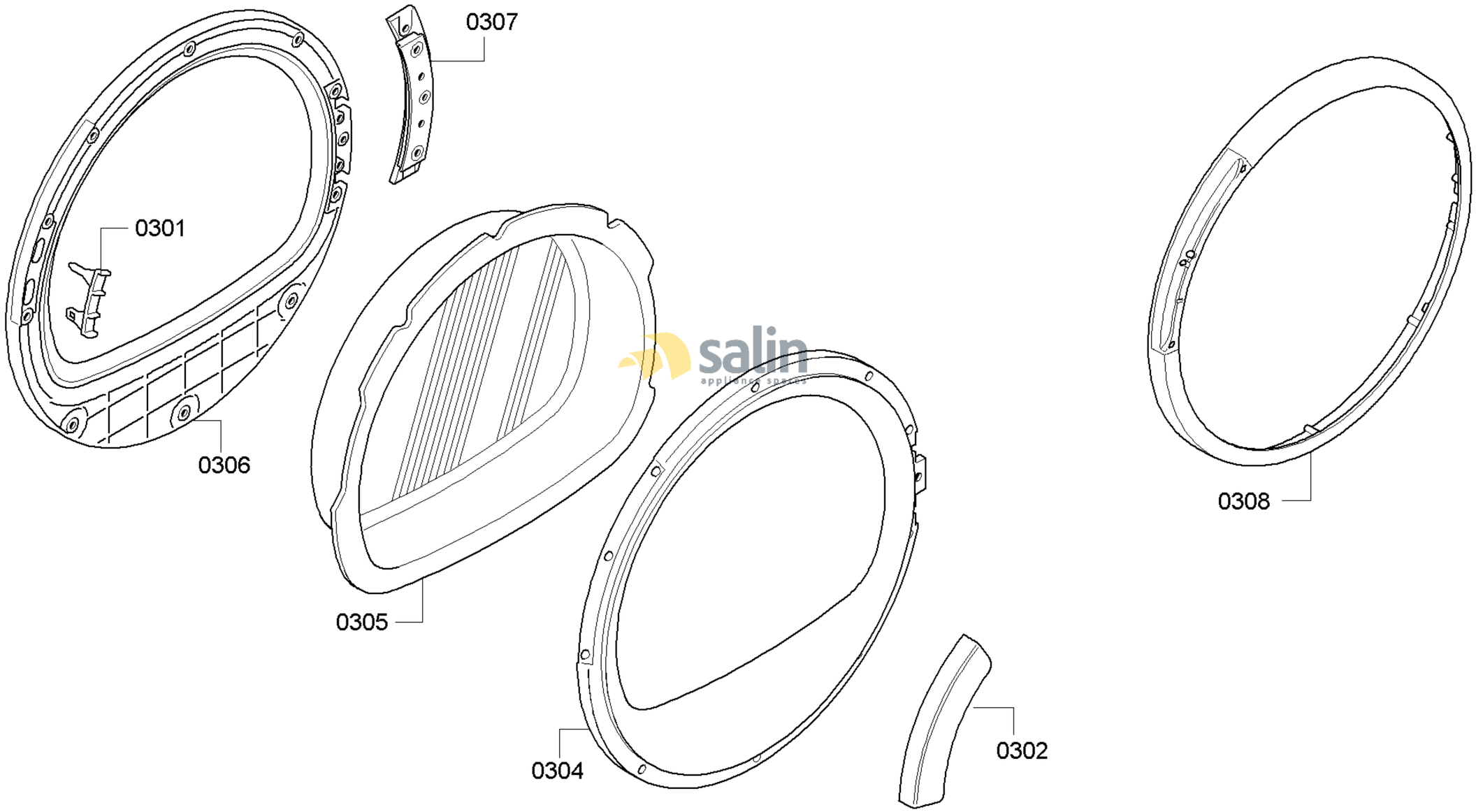

58300000162604 aet 000 a 3/6

FAMILY : WTW86563BY
MODEL NO: WTW86563BY/02
Check Position No/Part No or Replacement No

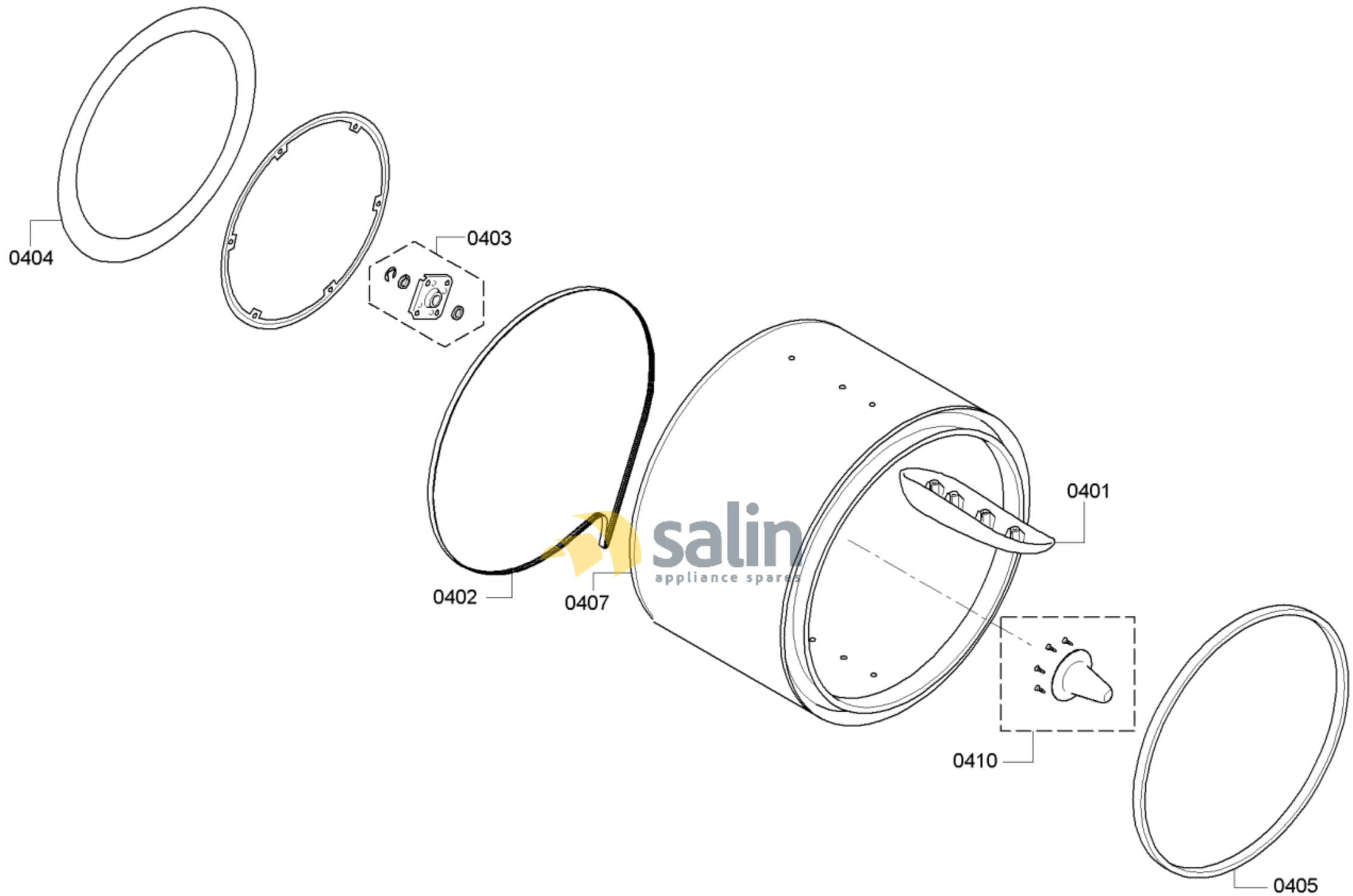

58300000162604 aet 000 a 4/6

FAMILY : WTW86563BY

MODEL NO: WTW86563BY/02

Check Position No/Part No or Replacement No

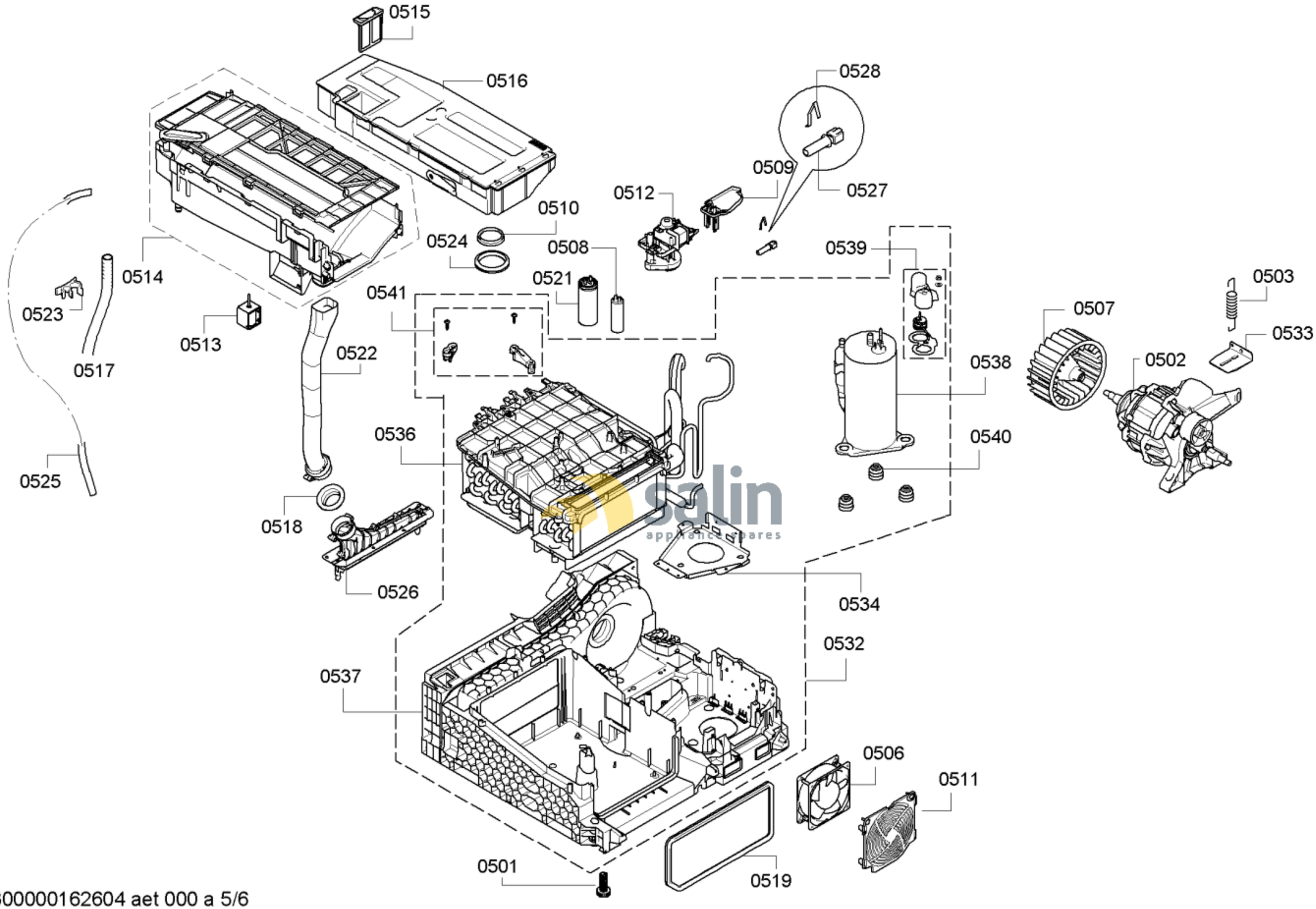

58300000162604 aet 000 a 5/6

FAMILY : WTW86563BY

MODEL NO: WTW86563BY/02

Check Position No/Part No or Replacement No